City of Willits
Sanitary Sewer Management Plan
(SSMP)

Last updated 05/01/16

Table of Contents

Executive Summary 3
Element 1 -Goals 5
Element 2 - Organizational Structure 6
Element 3- Legal Authority 9
Element 4 - Operations and Maintenance Program 11
Element 5 – Design and Performance Provisions 15
Element 6 – Overflow Emergency Response Plan 17
Element 7 – FOG Program, Fats, Oils and Grease Plan & Program 21
Element 8 – System Evaluation & Capacity Assurance 32
Element 9 - Monitoring, Measurement, and Modification 35
Element 10 - Internal Audits 37
Element 11 – Communications Program 38
References 39

Appendices

City Sewer System Map 41
City of Willits Design and Construction Standards, Sewer Sections 42
Overflow Emergency Response Plan 69
City of Willits FOG Discharge Application 152
City of Willits Example FOG Discharge Permit 154

Executive Summary

The City of Willits (City) owns and maintains the wastewater collection system that serves the City and other satellite agencies, including: Brooktrails Township, Meadowbrook Subdivision and the Sherwood Valley Rancheria. The City's wastewater collection system is comprised of approximately 22 miles of pipe ranging from 4" to 24" in diameter.

On May 2, 2006, the State Water Resources Control Board (Board) issued Order No. 2006-0003-DWQ, Statewide General Waste Discharge Requirements for Sanitary Sewer Systems (WDR). As a requirement set forth by the WDR, any entity that owns a collection system greater than one mile in length must develop and implement a Sewer System Management Plan (SSMP), which will be available to the State or Regional Board upon request and must be approved by the City's governing body.

The purpose of the SSMP is to reduce Sanitary Sewer Overflows (SSOs) by requiring collection systems to adopt preventative operating, maintenance and management plans. A SSO is a release of untreated or partially treated wastewater resulting in public health and environmental pollution hazards. It also refers to wastewater backups into buildings and onto private property that are caused by blockages in the City's portion of the sanitary sewer system.

The SSMP provides a mechanism to properly manage, operate, and maintain all parts of the sanitary sewer system, with the ultimate goal of reducing and preventing SSOs, as well as mitigating any SSOs that do occur. The City's SSMP must:

(1) Establish the legal authority to prevent illicit discharges into its sanitary sewer system;
(2) Require that sewers and connections be properly designed and constructed;
(3) Ensure access for maintenance, inspection, or repairs for those portions of the lateral owned or maintained by the City;
(4) Limit the discharge of fats, oils, and grease and other debris that may cause blockages; and
(5) Enforce any violation of its sewer ordinances.

The SSMP has eleven mandatory elements with implementation deadlines according to the size of the collection system. The deadline for completion of the updated SSMP is May 2, 2016. The elements are as follows:

(1) Goal;
(2) Organization;
(3) Legal Authority;
(4) Operation and Maintenance Program;
(5) Design and Performance Provisions;
(6) Overflow Emergency Response Plan (OERP);
(7) Fats, Oils and Grease (FOG) Program;
(8) System Evaluation and Capacity Assurance Plan;

(9) Monitoring, Measurement and Program Modifications;
(10) Sewer System Management Plan Program Audits; and
(11) Communication Program.

In November 2006, the City submitted a Notice of Intent (NOI) or application for permit coverage under the General WDR for Sanitary Sewer Systems. In February 2008, City Council approved a proposed SSMP Development Plan and Schedule which listed development and implementation deadlines for each of the eleven mandatory elements of the City's SSMP. Based on the service area population for the City of Willits Sewer Collection System, the original SSMP completion deadline was May 2, 2010. This 5-year update to the original SSMP has a deadline of May 2, 2016. This plan contains all the mandatory elements of an SSMP. The plan is considered a living document, subject to revisions as industry standards or conditions in the system change over time. Through continuous evaluation of the existing programs, future improvement plans will be developed to ensure adequate capacity to meet future growth demands and proper allocation of resources for the operation, maintenance, and timely repair of the sanitary sewer system.

Element 1 -Goals

This element of the SSMP outlines the City's goals with respect to the SSMP. This section complies with the goal requirements outlined in the WDR SSMP Element 1 requirements.

As stated by the State Water Resources Control Board Order No. 2006-0003-DWQ, Statewide General WDR for Sanitary Sewer Systems the City's SSMP goals shall address the following components:

> *The Goal of the SSMP is to provide a plan and schedule to properly manage, operate, and maintain all parts of the sanitary sewer system. This will help reduce and prevent SSOs, as well as mitigate any SSOs that do occur.*
> - State Water Resources Control Board Order No. 2006-0003-DWQ, Statewide General WDR for Sanitary Sewer Systems

The City of Willits is committed to protecting local waterways and the health of its citizens by preventing SSOs. The City's SSMP is meant to achieve cost effective maintenance, operations and management of the wastewater collection system.

The City of Willits (City) owns and maintains the wastewater collection system that serves the city, as well as several satellites agencies: Brooktrails Township, Meadowbrook Subdivision, and the Sherwood Valley Rancheria. The Sewer Department ensures safe conveyance of wastewater to the Willits Wastewater Treatment Plant (WWTP). The department strives to do so by employing preventative maintenance measures in a efficient and cost effective manner by utilizing a city developed Operation and Maintenance Program. In addition, the department has the legal authority to enforce programs that minimize sewer blockages. The city maintains an Overflow Emergency Response Plan (OERP) that provides direction in the event of SSOs. Furthermore, sewer operators train in emergency response to SSOs to ensure proper and efficient response to such events. The City of Willits Sewer Department is dedicated to achieving the following goals:

- *Minimize preventable SSOs.*
- *Maintain an effective and timely SSO Emergency Response Plan.*
- *Proactively inspect/maintain all city-owned sewer collection infrastructures.*
- *Prioritize areas in need of special maintenance and repair.*
- *Implement an effective Fats, Oils, and Grease (FOG) Control Program.*
- *Decrease Inflow and Infiltration.*
- *Implement an adequate Sewer Collection Rehabilitation Program.*
- *Provide sufficient sewer capacity to accommodate future growth*
- *Develop a public outreach program addressing SSO prevention and the importance of sewer collection infrastructure.*
- *Provide a safe work environment for all operators of the Collection System.*

Element 2 - Organizational Structure

This element of the SSMP outlines the City's organizational structure with respect to the SSMP. This section complies with the organizational structure requirements outlined in the WDR SSMP Element 2 requirements.

As stated by the State Water Resources Control Board Order No. 2006-0003-DWQ, Statewide General WDR for Sanitary Sewer Systems the City's organizational structure shall address the following components:

> *The SSMP must identify:*
>
> *(a) The name of the responsible authorized representative as described in Section J of this Order*
>
> *(b) The names and telephone numbers for management, administrative, and maintenance positions responsible for implementing specific measures in the SSMP program. The SSMP must identify lines of authority through an organizational chart or similar document with a narrative explanation, and*
>
> *(c) The chain of communications for reporting SSOs, from receipt of complaint or other information, including the person responsible for reporting SSOs to the State and Regional Water Board and other agencies if applicable (such as County Health Officer, County Environmental Health Agency, Regional Water Board, and/or State Office of Emergency Services (OES).*
>
> - State Water Resources Control Board Order No. 2006-0003-DWQ, Statewide General WDR for Sanitary Sewer Systems

Organizational Structure

The City of Willits is governed by a Council-City Manager form of government. The Council is an elected body of officials charged with governing the City. They are vested with powers of legislation on municipal affairs and form a complete local government consistent with the Constitution of the State.

The City Manager is the Chief Administrative Officer heading the administrative branch of the city government. The City Manager oversees the operation of the all departments within the City. The City Manager reports to Council and executes their direction by giving tasks to management. Management then directs city staff to perform the assigned work.

The City Attorney provides legal assistance and guidance to the City. The City Attorney is responsible for ensuring the City has proper legal authorities through existing ordinances.

This section includes an organizational chart that outlines the City's chain of command. Each position's role and responsibility is outlined in the section subsequent to the organizational chart.

2a. Responsible Authorized Representative

The Chief Plant Operator is the current "Responsible Authorized Representative" for the City of Willits for matters concerning official reports to the State and Regional Water Quality Control Board regarding the City's sanitary sewer system.

2b. Persons Responsible for SSMP Implementation

Title	Phone Number
City Manager	707-459-7120
Chief Plant Operator	707-459-5028
Public Works Director	707-459-7143
Sewer Operators	707-459-5028

2c. Chain of communication for SSO Reporting

An SSO is generally reported by the public to Sewer, Public Works, Police or City Hall. The report is then communicated to the Sewer Department. Sewer Operators respond to the report by taking emergency clean-up equipment, such as a vac-jet truck and other SSO response equipment, including a SSO response kit which includes all reporting and public safety supplies. The SSO information is tracked through operator log books and the California Integrated Water Quality System Project (CIWQS) website and reported to RWQCB, Mendocino County Public Health Department, and the Office of Emergency Services, as well as on the CIWQS database.

Organizational Chart

2a. Definition of Roles

City Council -Governing Body responsible for establishing policy.

City Manager, Public Work Director, Utilities Superintendent -Enforces policy, plans strategy, leads staff, allocates resources, delegates responsibility, authorizes outside contractors.

City Clerk-Calls REMIF in the event of an overflow on private property due to City.

Assistant/Associate Engineer, Engineering Technicians- Supports City staff with regulatory compliance.

Chief Plant Operator - Directs Field Crew in the event of an emergency.

Sewer Operator - Prepares reports for CIWQS reporting.

Maintenance Workers & Field Crew- Staff that conduct preventative and corrective maintenance activity mobilize and respond to notification of stoppages and SSOs, including contacting the proper agencies to report the spill and documenting information related to the spill.

Element 3- Legal Authority

This element of the SSMP outlines the City's Legal Authority with respect to the SSMP. This section complies with the legal authority requirements outlined in the WDR SSMP Element 3 requirements.

As stated by the State Water Resources Control Board Order No. 2006-0003-DWQ, Statewide General WDR for Sanitary Sewer Systems the City's Legal Authority shall address the following:

> *Each Enrollee must demonstrate, through sanitary sewer system use ordinance, service agreements, or other legally binding procedures, that it possesses the necessary legal authority to:*
>
> *(a) Prevent illicit discharges into its sanitary sewer system (examples may include I/I, stormwater, chemical dumping, unauthorized debris and cut roots, etc.);*
>
> *(b) Require that sewers and connections be properly designed and constructed;*
>
> *(c) Ensure access for maintenance, inspection, or repairs for portions of the lateral owned or maintained by the Public Agency;*
>
> *(d) Limit the discharge of fats, oils, and grease and other debris that may cause blockages, and*
>
> *(e) Enforce any violation of its sewer ordinances.*
>
> -State Water Resources Control Board Order No. 2006-0003-DWQ, Statewide General WDR for Sanitary Sewer Systems)

City of Willits Legal Authority

"Title 13-Sewers" of the Willits Municipal Code (WMC) governs the City's legal authority of the sewer collection system. Title 13 is considered a living document, subject to revision as regulatory agencies and best management standards for sewer systems change over time. Title 13 can be viewed by the public in its entirety at https://www.municode.com/library/ca/willits/codes/code_of_ordinances?nodeId=TIT13SE .

3a. Illicit Discharge Prevention Including I/I from Laterals, Stormwater, and Satellite Agencies

Illicit discharge prohibitions are covered under the WMC 13.04.120. Section 13.04.110 prohibits connection of drainage facilities to the sewer system, causing Inflow and Infiltration (I&I). There are three sewer agreements allowing satellite agencies to discharge into the Willits Collection System. In 1967, the City of Willits entered into the first agreement with the Brooktrails Township Community Services. Currently, there is an amended compilation of the agreement between the City and the Brooktrails Township through 2019. The City also entered into an agreement with the Sherwood Valley Band of Pomo Indians dated June 12, 1989. This agreement governs the Sherwood Valley Rancheria discharge into the Willits Collection System. This agreement was modified in 1995 to include additional area acquired by the Sherwood Valley Band of Pomo Indians to provide low cost housing to tribal

members. In 1956, the City signed an agreement with the Meadowbrook Manor County Sanitary District. This agreement has been amended several times since its inception. The City of Willits WMC Section 13.04.250 established the legal authority governing illicit discharges from satellite agencies into the Willits Sewer Collection System.

3b. Design and Construction Standards

Under WMC section 13.08.020, Design and Construction Standards, it states that the

> *Design and construction of building sewers and lateral sewers shall be in accordance with the requirements of the plumbing code and in accordance with city standard specifications. –WMC13.08.020*

The City of Willits recently adopted City Standards. The City's Design Standards are available in hardcopy at City Hall, 111 E. Commercial St., Willits, CA 95490 and online at http://thecityofwillits.com/city-standards-documents/.

3c. Ensure Access for Maintenance, Inspection and Repairs for Portions of the Lateral Owned or Maintained by the Public Agency.

Easement access is granted through easement agreements that are maintained by the Public Works Director (Director). The Sewer Department's collection crew regularly access easements for cleaning, TV inspections, I/I monitoring, or repair work.

3d. Limit the discharge of Fats, Oils, Grease and Other Debris which Lead to Blockages.

Section 13.04.310 Fats, Oils and Grease (FOG) Program, addresses the City's authority to regulate discharges fats, oils, and grease and other debris produced by Food Service Establishments (FSEs). The purpose behind this section is to reduce SSOs caused by grease related blockages.

3e. Enforcement of Sewer Ordinance Violations

Section 13.04.350 Enforcement gives the authority to enforce sewer ordinances. This section establishes the process of enforcement of violations.

References

- *WMC*, Title 13-Sewers
- Sewer Agreement – Brooktrails Township Community Services
- Sewer Agreement – Sherwood Valley Band of Pomo Indians
- Sewer Agreement – Meadowbrook Manor County Sanitary District
- Manor County Sanitary District

Element 4 - Operations and Maintenance Program

This element of the SSMP outlines the City's Operations and Maintenance Program with respect to the SSMP. This section complies with the operations and maintenance requirements outlined in the WDR SSMP Element 4 requirements.

As stated by the State Water Resources Control Board Order No. 2006-0003-DWQ, Statewide General WDR for Sanitary Sewer Systems the City's Operations and Maintenance Program shall address the following:

> *The SSMP must include those elements listed below that are appropriate and applicable to the Enrollee's system:*
>
> *(a) Maintain an up-to-date map of the sanitary sewer system, showing all gravity line segments and manholes, pumping facilities, pressure pipes and valves, and applicable storm water conveyance facilities;*
>
> *(b) Describe routine preventive operation and maintenance activities by staff and contractors, including a system for scheduling regular maintenance and cleaning of the sanitary sewer system with more frequent cleaning and maintenance targeted at known problem areas. The Preventive Maintenance (PM) program should have a system to document scheduled and conducted activities, such as work orders;*
>
> *(c) Develop a rehabilitation and replacement plan to identify and prioritize system deficiencies and implement short-term rehabilitation actions to address each deficiency. The program should include regular visual and TV inspections of manholes and sewer pipes and a system for ranking the condition of sewer pipes and scheduling rehabilitation. Rehabilitation and replacement should focus on sewer pipes that are at risk of collapse or prone to more frequent blockages due to pipe defects. Finally, the rehabilitation and replacement plan should include a capital improvement plan that addresses proper management and protection of the infrastructure assets. The plan shall include short- and long-term plans plus a schedule for developing the funds needed for the capital improvement plan;*
>
> *(d) Provide training on a regular basis for staff in sanitary sewer system operations and maintenance, and require contractors to be appropriately trained; and*
>
> *(e) Provide equipment and replacement part inventories, including identification of critical replacement parts."*
>
> -State Water Resources Control Board Order No. 2006-0003-DWQ, Statewide General WDR for Sanitary Sewer Systems

<u>City of Willits Operations & Maintenance Program</u>

The City maintains an operations and maintenance program for its collection system. This program includes a continuously updated sewer system map, a system of scheduling regular maintenance, and a rehabilitation and replacement plan. The following information outlines the plan.

4a. Sewer System Mapping

The City of Willits maintains an up to date map of the sewer collection system. In 2009, the City conducted a survey of all manhole lids and updated the sewer system maps to include elevation data, thereby converting old two dimensional maps to three dimensional maps. The addition of elevation data has aided the Engineering Department in design and hydraulic modeling. The City has recently acquired equipment that is capable of gathering mapping data as it televises the lines. This data is gathered by Granite XP software, which interfaces with ESRI. Once gathered, the information is then uploaded into our base map. The City is working towards making the following information available on the map:

- Elevations
- Mains
- Cleanouts
- Flow Direction
- Lift Stations
- Manholes
- Laterals
- Pressure pipes
- Valves

The City's Sewer Map is continually updated and improved. The City is currently working on developing a GIS system for the sewer system to utilize the TV truck's mapping capabilities.

4b. Routine and Preventative Operation and Maintenance Activities

The City's Sewer Department is responsible for the operation and maintenance of the City's collection system. The service area includes 23.3 miles of pipe, one lift station, and 482 manholes. In 2009, the City acquired new equipment to televise the system. In 2011 the City purchased a combination sewer cleaning truck. City Staff maintains a logbook of problem areas as identified by TV Truck inspections and SSOs. A GIS database is also used to record the collected information. Problem areas are defined as areas with frequent backups; Fats, Oils, and Grease (FOG) deposits; defects in the integrity of the pipes or other sewer structures; and root intrusions. Problem areas are worked into the routine maintenance schedule. Records are kept on areas that are televised, cleaned or repaired. They are tracked to ensure coverage of the system. City Staff targets televising and cleaning an average of five miles of pipe each year and covering the entire system with in 5 years. City Staff schedules cleaning and televising the lines by scheduling problem areas first. The rest of the system is scheduled by starting from the extents of the system and working inward, culminating the work at the treatment plant.

4c. Rehabilitation and Replacement Plan

The City maintains a short and long term *Capital Improvement Project List*. This list is included in the City of Willits fiscal year budget. On an annual basis the City plans for improvements projects, both long and short term, through the budgeting process. During this process, projects are prioritized and funding is identified. These projects

include repair, rehabilitation and construction on new and existing infrastructure to ensure the sustainability of the wastewater collection system.

Short-term Repair and Rehabilitation Projects

The City regularly inspects sewer lines using CUES closed circuit television (CCTV) truck. Problems are noted in a database called Granite XP. Areas that are prone to grease build up, root intrusion, cracks in the line, etc. are prioritized through the rating system and other data gathered in the Granite XP database. Funds are allocated on an annual basis for short term rehabilitation and repair projects.

In 2010, the City purchased new pipe patching equipment. Therefore, City Staff can now patch leaks in the field, without spending additional funds on contractors to perform the work.

Long-term Capitol Improvements Projects

The City of Willits is completed the construction of a new wastewater treatment plant. The goal of the project was to improve the quality of effluent and recycled water. In terms of our collection system, Long term Capitol Improvement Projects are planned out annually during the budgeting process.

4d. Operations and Maintenance Training

Staff training is facilitated both internally and externally. New employees work in tandem with more experienced staff to obtain experiential training on the proper operations and maintenance of the equipment and facilities. The City follows OSHA regulations providing safety training and tailgate meetings on confined space, eye safety, safe work habits, heat illness, defensive driving, back safety, first aid, and blood-born pathogens, trailer safety, safety signs and others. The operators set a goal of conducting biweekly tailgates training using the *7 Minute Minder* trainings. Trainings are tracked in a binder maintained at the plant by the operators.

Operators attend trainings from outside agencies such as CWEA and RCAC. Technical training is provided to keep staff abreast of new technology, current and upcoming regulatory issues, and the City's and department's policies and procedures. Staff receives training in collections topics such as: safety, SSO-WDR compliance workshops, emergency response plan for SSOs, FOG implementation, line cleaning, root control application, televising the sewer lines, pipe patching, as well as other important topics in the sewer collections field.

Cross training is encouraged and supported. It is recognized by the City as a vital instrument to ensure coverage in all aspects of the Sewer Department.

Training funds are identified annually during the budgeting process. Staff is encouraged to attend trainings, based on interest and areas that need improvement.

4e. Critical Equipment & Replacement Parts Inventory

The City maintains critical spare parts for sewer system operation and maintenance through regular inventories.

The City is capable of doing spot repairs for 6”-15” pipes using pipe patching technology. Larger projects are generally contracted out to licensed contractors. Equipment and parts for larger projects are provided by the contractor. Service vehicles are maintained by a local mechanic or in house.

Supervisors have the authority to purchase materials and supplies. Any items in excess of a thousand dollars require a Purchase Order, which must be signed by the City Manager. In the interest of pubic safety, a supervisor has the authority to bypass that requirement during in an emergency situation.

References

- *City of Willits Sewer System Map*
- *Capital Improvement Project List, City of Willits Fiscal Year Budget* (updated annually)
- *City of Willits Sewer Department Work Order*
- *7 Minute Minder (Training resource)*
- *Critical Equipment and Replacement Parts Inventory*

Element 5 – Design and Performance Provisions

This section of the SSMP outlines the City's Design and Performance Provisions, including a description of the City's design criteria, design and construction standards, and inspection protocol. This section complies with the Design and Performance Provisions requirements outlined in the WDR SSMP Element 5 requirements.

As stated by the State Water Resources Control Board Order No. 2006-0003-DWQ, Statewide General WDR for Sanitary Sewer Systems the City's Design and Performance Provisions shall address the following:

> *The SSMP must include those elements listed below that are appropriate and applicable to the Enrollee's system:*
>
> *" (a) Design and construction standards and specifications for the installation of new sanitary sewer systems, pump stations and other appurtenances; and for the rehabilitation and repair of existing sanitary sewer systems; and*
>
> *(b) Procedures and standards for inspecting and testing the installation of new sewers, pumps, and other appurtenance and for rehabilitation and repair projects."*
>
> -State Water Resources Control Board Order No. 2006-0003-DWQ, Statewide General WDR for Sanitary Sewer Systems

City of Willits Design and Performance Provisions

The City minimizes SSO occurrences caused by hydraulic loading by sizing sewer lines to accommodate current peak flows design capacity. The City is planning for the future by sizing lines according to projected growth patterns. To avoid surcharges in the sewer system that may result in an SSO, pipes will be sized to carry no more than 80% of the pipe diameter during peak capacity. The optimum pipe diameter is calculated using the Manning's Equation.

All sewers shall be designed to have a slope which will give a mean velocity at design of no less than 2.0 feet per second based on the Manning's Equation using an "n" value of 0.013. Minimum velocity, if approved by the Director, shall be no less than 1.5 feet per second at a design capacity. Slope requirements shall be followed to ensure self cleansing and self-oxidizing velocities in order to avoid significant generation of hazardous, odoriferous, and corrosive sulfur compounds.

The following peaking factors shall be utilized in the design of sewer mains:

Peak Factor	Pipe Size
3.0	8"
2.5	10"
2.0	12" to 15"

No gravity sewer main shall be less than 6 inches in diameter (implemented August 2002), and no laterals shall be less than 4 inches.

5a. Design and Construction Standards and Specifications for New Installations

In October of 2010, the City published a complete set of design and construction Standards. The document is titled *City of Willits Design and Construction Standards*. The standards are reviewed annually to include the best available technologies and ensure conformance with the latest codes. As problems construction standards and specifications are defined by the City with consideration to industry standards and local conditions. The *City of Willits Design and Construction Standards* provides information on the installation of sanitary sewer pipe and appurtenances describing:

- Pipe installation.
- Trench detail, including structure, excavation, backfill, foundation and bedding.
- Standard materials.
- Connection of service laterals.
- Installation of sewer home branches.
- Manhole construction and drop sewer connections.
- Clean outs.
- Grease traps.

5b. Inspection and Testing Standards for New Installations

The *City of Willits Design and Construction Standards* contains testing specifications and procedures for the installation of standard specifications. In addition, there is specific language for the following:

- Deflection test for sewer lines.
- Leakage test of sewer lines and service laterals.
- Television inspection of interior of installed pipe.

References

- *City of Willits Design and Construction Standards (Sewer Sections)*, http://thecityofwillits.com/city-standards-documents

Element 6 – Overflow Emergency Response Plan

This section of the SSMP outlines the City's OERP, including procedures for containment, cleaning, reporting and posting public warnings about the spill. This section complies with the OERP requirements outlined in the WDR SSMP Element 6.

As stated by the State Water Resources Control Board Order No. 2006-0003-DWQ, Statewide General WDR for Sanitary Sewer Systems the City's OERP shall address the following:

> *Each Enrollee shall develop and implement an overflow emergency response plan that identifies measures to protect public health and the environment. At a minimum, this plan must include the following:*
>
> *(a) Proper notification procedures so that the primary responders and regulatory agencies are informed of all SSOs in a timely manner;*
>
> *(b) A program to ensure an appropriate response to all overflows;*
>
> *(c) Procedures to ensure prompt notification to appropriate regulatory agencies, Regional Water Boards, water suppliers, etc.) of all SSOs that potentially affect public health or reach the waters of the State in accordance with the MRP. All SSOs shall be reported in accordance with this MRP, the California Water Code, other State Law, and other applicable Water Board WDRs or NPDES permit requirements. The SSMP should identify the officials who will receive immediate notification;*
>
> *(d) Procedures to ensure that appropriate staff and contractor personnel are aware of and follow the Emergency Response Plan and are appropriately trained;*
>
> *(e) Procedures to address emergency operations, such as traffic and crowd control and other necessary response activities; and*
>
> *(f) A program to ensure that all reasonable steps are taken to contain and prevent the discharge of untreated and partially treated wastewater to waters of the United States and to minimize or correct any adverse impact on the environment resulting from the SSOs, including such accelerated or additional monitoring as may be necessary to determine the nature and impact of the discharge.*
>
> - State Water Resources Control Board Order No. 2006-0003-DWQ, Statewide General WDR for Sanitary Sewer Systems

<u>City of Willits Overflow Emergency Response Plan</u>

The City maintains an overflow and emergency response plan for SSOs. Operators do periodic training to keep their skills sharp. The plan is reviewed and updated on an as needed basis during the bi-annual review and audit of the SSMP.

6a. Notification Procedures for Primary Responders and Regulatory Agencies

The City of Willits maintains an up-to-date OERP (Plan). The Sewer Overflow Response kit includes a simplified reporting form that can be filed out in the field and faxed to all relevant parties per the Plan. Spills have to be reported to the State Office of Emergency Services via phone. Contact information, including phone numbers for each agency are listed on the form.

Citizens and other City services (Police, Fire, Streets, Water, etc.) can report SSOs by calling City Hall (707) 459-4601 during normal business hours or the Police Dispatcher at (707) 459-6122 after hours or weekends. Police Dispatchers have been notified that when a spill is reported after hours, they must notify a live Staff member. In other words, they, under no circumstances, should leave a voice mail or cease attempts to contact someone and deliver the message directly to a Staff member at the Sewer Department.

6b. Response Program

The City contracted with Risk Management Solutions, now DKF Solutions Group, to develop the City's *SSO and Backup Plan*. The City adopted the plan in May of 2008. The plan ensures a uniform, proper response protocol for all levels of spills. The City considers the plan a living document, which can be revised as regulatory conditions change over time. The City reviews the document bi-annually or when regulatory changes occur to determine whether changes need to be reflected in the plan. Emergency response vehicles housed at the WWTP contain emergency response kits. Kits contain a flow chart instructing first responders on the proper response steps to take; they also contain a chart to aide in estimating the volume of a spill, a camera, a calculator, and a Field Questionnaire for documenting and reporting the spill.

6c. Prompt Regulatory Agency Notification Procedures

The City strives to report all SSOs within 2 hours of notification of the spill, regardless of size. When spills occur, a representative from the Sewer Department contacts the California Office of Emergency Services (OES), Regional Water Quality Control Board (RWQCB) in Santa Rosa, and the Mendocino County Environmental Health Department. Staff responding to the spill report first assesses the situation to determine the severity of the spill, take the proper actions to ensure that the spill is captured and returned to the sewer system. If the spill is over 1000 gallons, agencies are notified via phone at the earliest possible convenience, after the spill damage has been amended and within 2 hours of the spill notification. If there is a potential for contact with the public, the Responder will post public hazard signs, which are kept in trucks used for spill response. If the spill is less than 1000 gallons, the protocol for notification of regulatory agencies is to complete the Field Response Sheet, which contains questions on the State's CIWQS online reporting questionnaire, call OES within two hours and fax the Field Response Sheet to RWQCB and the Mendocino County Public Health agency when responders return to the office (within two hours of notification of the spill).

The Officials that will receive notification of a spill are:

Chief Plant Operator
300 N. Lenore St.
Willits, CA 95490
707-841-7911 (cell)

Public Works Director
380 East Commercial St.
Willits, CA 95490
707-459-7143
707-304-2996 (cell)

City Manager (Depending on the severity of the spill)
111 E. Commercial St.
Willits, CA 95490
707-459-7120

Office of Emergency Services (official on duty)
3650 Schriever Ave
Mather, CA 95655
1-800-852-7550
(OES provides a control number for reference)

Justin McSmith
Sanitary Engineering Associate
Regional Water Quality Control Board
5550 Skylane Blvd., Suite A
Santa Rosa, CA 95043
1-707-576-2082 (phone)
1-707-523-0135 (fax)

Mendocino County Environmental Health Department
501 Low Gap Road
Ukiah, CA 95482
707-463-4142
707-463-4038

6d. Overflow Response Procedures Notification for Personnel and Contractors

David Patzer of Risk Management Solutions (now known as DKF Solutions Group) conducted extensive training when the *SSO and Backup Plan* was originally adopted. Whenever substantial changes are made to the plan, the Department conducts trainings addressing the changes, in addition to reviewing the plan. The department also does periodic "tailgate" trainings on the OERP. The Public Works Department attends Traffic control trainings. They are called in to an emergency response situation if the first responder deems it necessary. Current contractors that are utilized in emergency situations ensure proper training on the equipment they use for response efforts. The City contracts with professionals that perform work in the City's

collection system. The City's contract requires sufficient coverage for any damages caused by the contractor. Generally, the first responder directs the contractor to do the work that the staff member deems necessary to achieve the objective of spill clean up and the health and safety of citizens and the environment. In addition, all contractors shall comply with provisions of all applicable laws, ordinances and regulations.

6e. Emergency Response Procedures for Mobilization and Appropriate Response

The Emergency Overflow Response Plan provides guidelines to address all procedures of a sewer overflow. Back up coverage, in the form of personnel or equipment, is provided to ensure all possible situations are adequately managed. Response time follows US EPA guidelines of 60 minutes or less at any time. Proper safety procedures are employed to ensure a safe environment, protecting the public and City staff. Generally, spill response protocol involves spill containment, clearing the blockage, sanitizing spill to minimize health and safety impacts to the general public or the environment and reporting the spill. Proper signage warning of health hazards is used if the spill reaches storm water basins and/or if the spill may come into contact with the public.

6f. Containment, Prevention and Monitoring of Wastewater Contamination in Waters of the U.S.

The *SSO and Backup Plan* provides guidelines for minimizing or avoiding wastewater contact with surface waters or drainage channels. First responders assess the spill location identifying any nearby surface waters or drainage channels. If they appear to be threatened by contamination, staff responds accordingly. Possible response efforts include, but are not limited to vacuuming wastewater and using sand bags to contain wastewater, thereby minimizing contamination or contact with any surface waters or drainage channels. If necessary, sandbags will be placed in the storm drain downstream of the spill location. Sampling of any impacted waters will commence according to the guidelines specified in the Emergency Response Plan. If necessary, the City will take the following measures: assessment, traffic control, volume estimate, correction, clean-up, investigation, sampling of receiving waters, notification, incident documentation and enforcement of violations. Based on its findings, the City will take further action to ensure that the cause of the spill is eliminated and proper measures are being taken to avoid duplication of the spill.

References

- *Willits SSO and Backup Plan, Purpose Policy & Definition*
- *SSO and Backup Response Plan Field Guide*
- *Emergency Vendor Contact Sheet*
- *Regulatory Notification Packet*
- *Willits Backup Packet*
- *Public Notification Door Hangers*
- *Willits Overflow Packet*
- *SSO Public Posting*

Element 7 – FOG Program, Fats, Oils and Grease Plan & Program

This section of the SSMP outlines the City's Fats, Oil, and Grease (FOG) Control Program, including procedures for identifying problem areas, focused cleaning, and source control. This section complies with the FOG control requirements set forth in the WDR SSMP Element 7 requirements.

As stated by the State Water Resources Control Board Order No. 2006-0003-DWQ, Statewide General WDR for Sanitary Sewer Systems the FOG Control Program shall address the following components:

> *Each enrollee shall evaluate its service area to determine whether a FOG control program is needed. If an enrollee determines that a FOG program is not needed, the enrollee must provide justification for why it is not needed. If FOG is found to be a problem, the enrollee must prepare and implement a FOG source control program to reduce the amount of these substances discharged to the sanitary sewer system. This plan shall include the following as appropriate:*
>
> *(a) An implementation plan and schedule for a public education outreach program that promotes proper disposal of FOG;*
>
> *(b) A plan and schedule for the disposal of FOG generated within the sanitary sewer system service area. This may include a list of acceptable disposal facilities and/or additional facilities needed to adequately dispose of FOG generated within a sanitary sewer system service area;*
>
> *(c) The legal authority to prohibit discharges to the system and identify measures to prevent SSOs and blockages caused by FOG;*
>
> *(d) Requirements to install grease removal devices (such as traps or interceptors), design standards for the removal devices, maintenance requirements, BMP requirements, record keeping and reporting requirements;*
>
> *(e) Authority to inspect grease producing facilities, enforcement authorities, and whether the Enrollee has sufficient staff to inspect and enforce the FOG ordinance;*
>
> *(f) An identification of sanitary sewer system sections subject to FOG blockages and establishment of a cleaning maintenance schedule for each section; and*
>
> *(g) Development and implementation of source control measures for all sources of FOG discharged to the sanitary sewer system for each section identified in (6) above.*
>
> -State Water Resources Control Board Order No. 2006-0003-DWQ, Statewide General WDR for Sanitary Sewer Systems)

<u>City of Willits Fats, Oils, and Grease (FOG) Source Control Plan</u>

7a. Public Education Implementation Plan and Schedule

The City implements its public outreach campaign primarily through the City website, through contact with business owners during the FOG application process, and with regularly scheduled contact about permit renewal. The focus of this campaign provides

the public with information regarding pollution prevention and Best Management Practices (BMP) for proper disposal of fats, oils, and grease. The campaign plan includes posting information on the city's website: www.cityofwillits.com, as well as developing posters for FSEs identifying BMPs for the proper disposal of fats, oils and grease. These are distributed during inspections. In addition, informational brochures will be available at City Hall.

7b. FOG Disposal Plan and Schedule

FSEs are required to properly dispose of fats, oils, and grease. Yellow grease is generally picked up by recycling companies. Interceptors are required to be cleaned at least every six months or more often if deemed necessary. Cleaning is performed by haulers certified by the California Department of Food and Agriculture, Meat and Poultry Inspection Branch. The State requires haulers to record disposal location(s), track their activities, and manifests to ensure proper and legal disposal of the contents of the interceptor.

7c. Legal Authority Plan

The WMC Code carries the legal authority to enforce existing codes to ensure proper management and disposal of grease waste. It also establishes the authority to inspect, permit and/or take corrective action if a business is found in violation of the code.

7d. Requirements for FSEs

The WMC requires installation of grease removal devices for all FSEs. In addition, the WMC requires FSEs to obtain a FOG Wastewater Discharge Permit (WDP) for grease disposal. The permit outlines specific BMP to be followed by FSEs.

7e. Inspection and Enforcement Authority Plan

The WMC gives the authority to inspect and permit FSEs. The code establishes the City's authority to enforce code violations.

7f. "Hot Spot" Identification and Maintenance Plan and Schedule

"Hot Spots" are problem areas that have a history of blockages and require frequent maintenance. These areas are prioritized and maintained more frequently. Data from sewer line inspections is logged, analyzed, and prioritized for future work projects. This work is performed to minimize the risk of sewer main blockages. Information is collected to analyze the cause of the failure, response time, responding staff, and maintenance required or performed for inspected sewer infrastructure. The City uses this information to determine trends that will help identify cleaning frequency for critical and non-critical areas and will prioritize manhole inspection, line cleaning, video inspection, chemical root control, grease control, and sewer line spot repairs. The program tracks areas of high maintenance defined as "Hot Spots." The list is updated regularly and locations are given priority for inspection.

7g. "Hot Spot" Source Control Measures Development and Implementation Plan

The City of Willits' FOG WDP addresses inspection and permitting of FSEs for compliance with fats, oils, and grease disposal requirements. "Hot Spots" or problem areas with high maintenance needs are prioritized for more frequent inspections and special permitting requirements. Sewer line blockages that are caused by excessive grease accumulation are investigated to find the possible location (business or residential area) causing the problem. In addition, areas with high maintenance needs (Hot Spots) are flagged for follow up investigations and further enforcement if needed. Residential or business outreach and education may be used further address problem areas.

FOG Source Control Program

7.1 Title

This document shall hereafter be known as the "FOG Source Control Program"

7.2 Purpose

The purpose of the FOG Control Program is to reduce SSOs and blockages, and to protect public health and the environment by minimizing exposure to unsanitary conditions.

7.3 Legal Authority

Implementation of a successful FOG Control Program is dependent on the City's ability to enforce program requirements on non-domestic sources of wastewater. The City's authority to implement a FOG Control Program is based on the potential impact of SSOs on either Waters of the US or storm basins, both of which are regulated by the Clean Water Act governed by the Environmental Protection Agency. A component of the Clean Water Act, the General Pretreatment Regulations, 40 CFR 403, requires municipalities to establish local authority. The City of Willits has established the legal authority to regulate FOG contributions to the Willits collection system by adopting 13.04.310 and 13.04.320 of the WMC. The FOG Program has been adopted into the WMC as Section 13.04.310.

7.4 Regulatory Requirements

The City of Willits has established and incorporated a FOG ordinance into the City WMC. The ordinance is adopted into the WMC as section 13.04.400 and includes a title and purpose, definitions specific to FOG, permit requirements for FSEs, pretreatment requirements, general prohibitions, specific prohibitions, BMPs requirements, and other monitoring and reporting requirements as necessary.

7.5 FOG WDP Required

All FSEs proposing to discharge or currently discharging wastewater containing FOG to the Publically Owned Treatment Works (POTW) shall obtain a FOG WDP. Existing FSEs discharging to the POTW shall obtain a FOG WDP within the timeframe established in the WMC. Any new FSE proposing to discharge to the POTW shall obtain a FOG WDP prior to beginning the discharge. The implementation of enforcing this requirement depends on staff availability.

FOG WDPs shall be subject to all provisions of the WMC. Nothing in the permit is intended to relieve the discharger of any local, state, or federal regulation.

7.5.1 Permit Application

The City has contacted all existing FSEs, requested their participation in the permit program, and has started the inspection process of each establishment. The FOG permit applications include the following information:

- Name, address, telephone number, description of the FSE, and service activities.
- Name of any and all principals/ owners of the FSE.
- Name and address of property owner or lessor and the property manager where the FSE is located
- Floor, site, and plumbing plans showing detailed sewer connections and grease removal devices.
- Specifications of all grease removal devices.
- Any other information as may be specified in the application form.

Special cases may require additional information related to the applicant's business operations and potential discharge in order to properly evaluate the permit application.

7.5.2 FOG WDP Conditions

The FOG WDP may contain any of the following conditions or limits:

- Limits on discharge of FOG and other pollutants
- Requirements to install, operate, and maintain adequate pretreatment devices including grease removal devices
- Grease interceptor and/or trap maintenance frequency schedule
- Requirements for implementing and maintaining all applicable BMPs Practices
- Requirements for maintaining logs and records, including waste hauling records and manifests and to have such records available for inspection
- Additional requirements as may be determined to be reasonably appropriate by the or as specified by other Regulatory Agencies to protect the collection system
- Other terms and conditions, which may be reasonably applicable to ensure compliance with the FOG program

7.5.3 FOG WDP Modifications

In accordance with the WMC, a FOG WDP may be modified for good cause, including but not limited to the following reasons:

- To incorporate any new or revised federal, state, or local pretreatment standards or requirements;
- To address significant alterations or additions to the user's operation, processes, or wastewater volume or character since the time of the WDP issuance;
- A change in the POTW that requires either temporary or permanent reduction or elimination of the authorized discharge;

- A circumstance in which the permitted discharge poses a threat to the POTW or city personnel;
- Violation of any terms or conditions of the WDP;
- Misrepresentations or failure to fully disclose all relevant facts in the WDP application or in any required reporting; or
- To correct typographical or other errors in the WDP.

7.6 Identifying FOG Sources

FOG source identification an important component to reducing SSOs. This is a proactive measure, intended to address problem areas before an overflow occurs. The strategy for identifying problem areas begins with reviewing historical information associated with "hot spots," which are areas within the collection system that have record of frequent blockages due to FOG build up. These areas are prioritized and measures are taken to address the problem.

Methodical approach to identifying FOG sources:

1. Identify problem areas within the collection system based on SSOs, cleaning frequency, types of materials being removed during cleaning.
2. Inspect & record the line using CCTV equipment.
3. Categorize the hot spots by the cause of the operational problems (i.e. roots, FOG, structural issues).

If a problem is identified, the location is noted and the Director determines the measures appropriate for reducing the future potential for blockages.

7.7 Pretreatment

Currently, the best means of controlling FOG is the use of a grease removal device such as a grease interceptor or an automatic grease trap. FSEs will be required to install, operate, and maintain an approved type and adequately sized grease removal device. The grease removal device shall be adequate to separate and remove FOG contained in wastewater discharges from FSEs prior to discharge to the sewer system. Fixtures, equipment, and drain lines located in the food preparation and clean up areas of FSEs that are sources of FOG discharges shall be connected to the grease removal device.

7.7.1 Construction of FSEs

New FSEs shall install and properly maintain an adequately sized grease removal device prior to commencing discharges of wastewater to the sewer system.

7.7.2 Existing FSEs

Existing FSEs are required to have an adequately sized grease removal device. Implementation of the FOG program will require staff time dedicated to the project. Existing FSEs will be contacted and requested to participate in the program. FSEs in hot spots, which have caused or contributed to grease related blockages in the sewer system, or which have sewer laterals connected to hotspots, or that have been determined by the field Sewer Operators to contribute significant FOG to the sewer system shall will be prioritized. FSEs not in hotspot areas may request an extension of time to participate in the program if they can show proof of financial or logistical hardship to the Director. At the Director's discretion, based on inspection, sampling or camera data from the line, the request will be granted if the FSE is not impacting the collection system.

7.8 Grease Removal Device Requirement

FSEs shall provide wastewater acceptable to the FOG Program, under the requirements and standards established herein before discharging to the City's collection system. Any FSE that is required to provide FOG pretreatment shall install, operate and maintain an approved type and adequately sized grease removal device necessary to maintain compliance with the objectives of the FOG Control Program. The size and type of the grease removal device will be determined by the amount discharged and the conditions present at the FSE. The FSE will submit the size and type of grease removal device for approval from the City. One such alternate pretreatment technology is a grease trap. This alternative is covered under Section 7.12. Considerations of granting an automatic grease trap vs. a grease interceptor will be based on the following:

- There is insufficient space for installation and/or maintenance of a grease interceptor.
- There is inadequate slope for gravity flow between kitchen plumbing fixtures and the grease interceptor and/or the private collection lines or the public sewer.
- The FSEs can demonstrate that the alternative pretreatment technology is equivalent or better than a grease interceptor in controlling FOG discharge. In addition, the FSE must be able to demonstrate, after installation of the proposed alternative pretreatment, its continued ability to effectively control FOG discharge.

The Director may require changes to the FSE's permit if subsequent monitoring shows accumulation of FOG in the sewer lateral or the collection system immediately downstream of the FSEs connection.

7.9 Grease Interceptor Requirements

1. Approved grease interceptor sizing and installation shall conform to the latest approved edition of the California Uniform Plumbing Code. Grease interceptors shall be constructed in accordance with the design approved by the Director and shall have a minimum of two compartments with fittings designed for grease retention.

3. The grease interceptor shall be installed at a location where it shall be at all times easily accessible for inspection, cleaning and removal of accumulated grease.

4. Access manholes, with a minimum diameter of 24" inches, shall be provided over each grease interceptor chamber and sanitary tee. The manholes shall also have readily removable covers to facilitate inspection, grease removal and wastewater sampling activities.

7.9.1 Grease Interceptor Maintenance Requirements

1. Grease interceptors shall be maintained in efficient operating condition by periodic removal of all contents of the devices which include wastewater, accumulated FOG, floating materials, sludge and solids.

2. No FOG that has accumulated in a grease interceptor shall be allowed to pass into any sewer lateral, sewer system, storm drain, or public right of way during maintenance activities.

3. FSEs that are located in an area that is considered to be a hot spot will be required to submit data and information necessary to establish a maintenance frequency for their grease interceptor.

4. The maintenance frequency for all FSEs with a grease interceptor shall be determined in one of the following methods:

    a. Grease Interceptors shall be fully pumped out and cleaned periodically to prevent SSOs. The maintenance frequency may vary depending on the condition of the grease interceptor or the collection system. Grease interceptor maintenance shall not exceed six months between cleaning intervals.

    b. The owner/ operator of a FSE may submit a request to the Director requesting a decrease in the maintenance frequency at any time. The FSE has the burden of responsibility to prove that the change reflects actual operating conditions based on the average FOG accumulation over time. The FSE must also show that it is in full compliance with the conditions of its permit and the WMC. Upon approval of the Director, the FOG Permit will be modified accordingly to reflect the change in maintenance frequency.

5. Wastewater, accumulated FOG, floating materials, sludge/ solids, and other materials removed from the grease interceptor shall be properly disposed off site by waste haulers in accordance with federal, state, and/or local laws.

7.10 Grease Trap Requirements

1. FSEs may be required to install grease traps in the waste line leading from drains, sinks and other fixtures or equipment where grease may be introduced into the sewer system in quantities that can cause blockages.

2. Sizing and installation of grease traps shall conform to the latest approved edition of the California Uniform Plumbing Code.

3. Grease traps shall be maintain in efficient operating condition by removing accumulated grease on a periodic basis. The maintenance frequency may vary depending on the condition of the grease trap or collection system. Grease trap maintenance shall not exceed two weeks between cleaning intervals.

4. Grease traps shall be maintained free of all food residues and any FOG waste removed during the cleaning and scraping process.

5. Grease traps shall be inspected periodically to check for leaking seams and pipes, and for effective operation of the baffles and flow regulating device. Grease traps and their baffles shall be maintained free of all caked-on FOG and waste. Removable baffles shall be taken out of the grease trap and cleaned during the maintenance process.

6. Dishwashers and food waste disposal units shall not be connected to or discharged into any grease trap.

7.11 Monitoring Facilities Requirements

1. The City may require FSEs to construct and maintain in proper operating condition, at the FSEs' sole expense, flow monitoring, constituent monitoring and/or sampling facilities.

2. The location of the monitoring and/or metering facilities shall be subject to approval by the Director.

3. FSEs may be required to provide immediate, clear, safe and uninterrupted access to authorized representatives of the City of Willits to all monitoring and or metering facilities.

4. FSEs may also be required by the Director to submit waste analysis plans, contingency plans, and meet other necessary requirements in order to ensure proper operation and maintenance of grease removal devices and to comply with the WMC.

7.12 Waiver from Grease Removal Device Installation

When the installation of a grease removal device cannot be installed or equivalent alternative pretreatment cannot be implemented, a waiver from the grease removal device may be granted with the imposition of a line maintenance fee as established in the City of Willits Fee Schedule. Additional requirements may be imposed on the discharge of FOG into the sewer system.

7.13 Terms and Conditions

A waiver shall contain the terms and conditions that serve as the basis for its issuance. A waiver may be revoked at any time when the terms or conditions for issuance are not met or no longer exist. In addition, the waiver shall remain in effect until the specified expiration date.

7.14 Cost Recovery

A FSE will be required to reimburse the City of Willits for all costs incurred for cleaning the sewer line to remove FOG buildup as a result of the FSE's discharge.

7.15 Discharge Prohibitions

As adopted by the WMC 13.04.130B, the City prohibits the discharge of "any water of wastewater which may contain more than one hundred milligrams per liter of fat, oil, or grease." Furthermore, the general discharge prohibitions are defined by WMC 13.04.120, any discharge material which may be prohibited falls under the WMC 13.04.130, and any pollutant limitations are outlined in the WMC under 13.04.160.

7.15.1 FOG and Solid Material

Discharge of any waste which has been removed from a grease device into the sewer system is prohibited. Grease removed from interceptors shall be hauled on an approved regular schedule, which will be determined by the average rate of accumulated material. This is a requirement of the grease removal device permit.

7.15.2 Additives

The City prohibits the use of additives (i.e. enzymes). The use of additives defeats the purpose of grease removal devices.

7.15.3 Waste Cooking Oil

Disposal of waste cooking oil into drainage pipes is prohibited. All waste cooking oils shall be collected and stored properly in receptacles such as barrels or drums for recycling or other acceptable methods of disposal.

7.15.4 Dishwasher Discharges

The City prohibits the discharge of dishwashers into grease traps. Dishwashers may be connected to grease interceptors if the interceptor is adequately designed and sized to receive the volume of material discharged.

7.15.5 High Temperature Discharges

Discharge of wastewater with temperatures in excess of 140º F (60 ºC) into any grease removal device is prohibited. Higher temperatures have an increased probability of liquefying grease, thus bypassing the function of the grease removal device.

7.15.6 Food Grinders

Food grinders are prohibited at all new FSEs. Existing FSEs undergoing a remodel will be required to remove all food grinders. Existing FSEs not undergoing a remodel but which have caused a SSO will be required to remove all food grinders within 180 days of notification.

7.15.7 Sanitary Wastes

Discharge of waste from toilets, urinals, wash basins and other fixtures containing fecal materials into sewer lines intended for grease interceptors service is prohibited.

7.16 Best Management Practices (BMPs)

All FSEs shall implement BMPs to minimize the discharge of FOG to the sewer system. Detailed requirements for the BMPs shall be specified in the permit. These may include kitchen practices and employee training to minimize FOG discharge.

7.16.1 Installation of Drain Screens

Drain screens shall be installed on all drainage pipes in food preparation areas.

7.16.2 Segregation and Collection of Waste Cooking Oil

All waste cooking oil shall be collected and stored properly in recycling receptacles such as barrels or drums. Such recycling receptacles shall be maintained properly to insure that they do not leak. Licensed waste haulers or an approved recycling facility must be used to dispose of waste cooking oil.

7.16.3 Disposal of Food Waste

All food waste should be disposed of directly into the trash or garbage and not in sinks. The practice of double lining bags for food wastes that have the potential to leak in trash bins is highly recommended.

7.16.4 Employee Training

Employees of the FSE shall be trained by ownership/management periodically as specified in the permit, on the following subjects:

- How to dry-wipe pots, pans, dishware and work areas before washing to remove grease.
- How to properly dispose of food waste and solids in sealed plastic bags prior to disposal in trash bins or containers to prevent leaking and odors.
- The location and use of absorption products to clean under fryer baskets and other locations where grease may be spilled or dripped.
- How to properly dispose of grease or oils from cooking equipment into a proper grease receptacle without spilling.

7.16.5 Maintenance of Mechanical Exhaust Ventilation Filters

Filters shall be cleaned as frequently as necessary to be maintained in good operating condition. The wastewater generated from cleaning the filter shall be disposed of properly.

7.16.6 Kitchen Signage

Best Management and waste minimization practices shall be posted conspicuously in the food preparation and dishwashing areas at all times.

7.17 Drawing Submittal Requirements

FSEs will be required to submit drawings associated with the permit application. Drawings are necessary to map out the location of drainage and plumbing at the facility to ensure compliance with the FOG program requirements.

7.17.1 As-built Plans

FSEs may be required to submit copies of as-built facility site plans, mechanical and plumbing plans and details to show all sewer locations and connections. The documents shall be in a form and content acceptable to the Director for review of existing or proposed grease control devices, monitoring facilities, metering facilities and operating procedures. The review of the plans and procedures shall in no way relieve FSEs of the responsibility to modify the facilities or procedures in the future as necessary to produce an acceptable discharge, and to meet the requirements of the FOG Control Program.

7.17.2 Schematic Drawings

FSEs may be required to submit a schematic drawing of the FOG control device or other pretreatment equipment, piping and instrumentation diagram and wastewater characterization report. At the director's discretion, the drawings may be required to be prepared by a California Registered Civil, Chemical, Mechanical, or Electrical Engineer.

7.18 Record Keeping Requirements

FSEs shall be required to keep records of cleaning activities for no less than three years. FSEs shall, upon request, make records available to representative of the City of Willits. These records should include:

- An inspections logbook of grease removal device cleaning and maintenance practices
- Copies of records and manifests of waste hauling

<u>References</u>

The following supporting information for Element 7 is maintained by the Sewer & Engineering Department:

- *WDP* (WWDP), Permit Application and conditions
- *FOG Source Control Program Summary*
- *City of Willits Grease Interceptor Policy*
- *FOG Public Outreach Program samples*
- *City of Willits Design and Construction Standards*, Design Standards for Grease Removal Devices
- List of Grease Haulers Service Vendors
- List of Grease Removal Device Manufacturers
- *Enforcement Response Plan*
- *WWTP operator inspection logbook*

Element 8 – System Evaluation & Capacity Assurance

This section of the SSMP outlines the City's System Evaluation and Capacity Assurance Program, including procedures for evaluating the collection system's capacity and planning for the future of the system. This section complies with the system evaluation and capacity assurance requirements set forth in the WDR SSMP Element 8 requirements.

As stated by the State Water Resources Control Board Order No. 2006-0003-DWQ, Statewide General WDR for Sanitary Sewer Systems the System Evaluation and Capacity Assurance element shall address the following components:

> *"The Enrollee shall prepare and implement a capital improvement plan (CIP) that will provide hydraulic capacity of key sanitary sewer system elements for dry weather peak flow conditions, as well as the appropriate design storm or wet weather event. At a minimum, the plan must include:*
>
> *(a) Evaluation: Actions needed to evaluate those portions of the sanitary sewer system that are experiencing or contributing to an SSO discharge caused by hydraulic deficiency. The evaluation must provide estimates of peak flows (including flows from SSOs that escapes from the system) associated with conditions similar to those causing overflow events, estimates of the capacity of key system components, hydraulic deficiencies (including major components of the system with limiting capacity) and the major sources that contribute to the peak flows associated with overflow events;*
>
> *(b) Design Criteria: Where design criteria do not exist or are deficient, undertake the evaluation identified in (a) above to establish appropriate design criteria; and*
>
> *(c) Capacity Enhancement Measures: The steps needed to establish a short-and long-term CIP to address identified hydraulic deficiencies, including prioritization, alternatives analysis and schedules. The CIP may include increases in pipe size, I/I reduction programs, increases and redundancy in pumping capacity, and storage facilities. The CIP shall include an implementation schedule and shall identify sources of funding.*
>
> *(d) Schedule: The Enrollee shall develop a schedule of completion dates for all portions of the capital improvement program developed in (a)-(c) above. This schedule shall be reviewed and updated consistent with SSMP review and update requirements as described in Section D. 14."*
>
> -State Water Resource Control Board Order No. 2006-0003-DWQ, Statewide General WDR for Sanitary Sewer Systems

<u>City of Willits System Evaluation & Capacity Assurance Program</u>

The City of Willits owns and maintains its wastewater collection system. The system contains approximately 22 miles of pipe ranging from 4" to 24" in diameter. In order to prevent sewer line surcharges that result in SSOs, the City ensures sewer connection only when adequate and safe capacity is deemed available in that section of the system by the

Director or designee. The City is developing a three dimensional model of the sewer system to evaluate the hydraulic capacity of the system. This will enable City staff to identify capacity deficiencies.

Annually, the Public Works Director, Utilities Superintendent, Sewer Department Head, City Manager, and Finance Director plan Capital Improvement Projects for the Sewer Department. Capital Improvement Project budgeting is generally projected for the upcoming 5 years. During these meetings, capacity related improvement projects are addressed and incorporated into budgetary planning.

8a. SSO evaluation

The City tracks the cause, location, volume, and remedial actions of SSOs. This information will be used to analyze and obtain peak flow estimates during SSO events. Key system components are identified and their capacity is tracked to ensure peak flow capacity. When pipe segments and key component hydraulic deficiencies are identified, they are logged for improvement. Depending on the magnitude of the project needed to repair the deficiency, it is either fixed in house, contracted out, or put on the Capital Improvement Project list to be addressed during annual fiscal budgeting. If the latter is the case, the area is targeted as in need of frequent maintenance and is scheduled for regular televising and cleaning. Sewer lines are televised regularly to inspect and record system deficiencies. When deficiencies are detected they are recorded and prioritized for repair.

8b. Design Criteria

The City's design criteria incorporates the best available technology and has been tailored to the conditions found in the City. The design criteria in the City Standards does not specify sizing related to capacity because there are too many variables to consider. The section of the system being worked on must be analyzed on a case by case basis and approved by the Director. When computer modeling is available, system additions and improvement projects will be modeled to ensure sufficient capacity.

8c. Capacity Enhancement Measures

Short and long term Capital Improvement Projects are addressed annually during budgeting. Prior to budgeting, the Sewer and Public Works Departments prioritizes problem areas in need of rehabilitation, replacement or repair. The department then determines a schedule for repairs based on project need and funding. If a priority project exceeds available funding, the department plans alternative measures to ensure the problem area does not cause an overflow. Alternative measures include frequent maintenance, televising and other measures that the department deems appropriate depending on the problem. Short-term Capital Improvement Projects include patching pipes, root removal, replacing or installing a lower lateral, or other relatively small projects. Long-term Capital Improvement Projects include everything from replacing a segment of the sewer main to constructing a new wastewater treatment plant. The Capital Improvement Project Plan is published annually and includes 5 year projection of large scale projects and purchases.

8d. Capital Improvement Schedule

The City purchased a television truck in 2009 and a new vacuum/ jet truck in 2011. The City will do a review of the system to identify problem areas. A full review of the system is expected to be complete in three years. As problem areas are identified, they will be prioritized on a master list. Depending on the scale of the problem and available funding they will either be addressed as a short term capital improvement project, or they will go on the long-term capital improvement project list so the during the annual budgeting process funding can be identified. In the 2015-2016 Fiscal Budget, the City identified funding for these long term projects; sewer line replacement, levee stabilization, and a septage receiving station.

References

- *City of Willits Final Budget*, published annually, available at City Hall
- *Sewer Department Capital Improvement Master List*

Element 9 - Monitoring, Measurement, and Modification

This section of the SSMP outlines the City's Monitoring, Measurement, and Modification Program including procedures for assessing the effectiveness of programs instituted in the SSMP and modifying the programs as changes occur. This section complies with the monitoring, measurement, and modification requirements outlined in the WDR SSMP Element 9 requirements.

As stated by the State Water Resources Control Board Order No. 2006-0003-DWQ, Statewide General WDR for Sanitary Sewer Systems the Monitoring, Measurement, and Modification element shall address the following components:

> *The Enrollee shall:*
> *(a) Maintain relevant information that can be used to establish and prioritize appropriate SSMP activities;*
> *(b) Monitor the implementation and, where appropriate, measure the effectiveness of each element of the SSMP;*
> *(c) Assess the success of the preventive maintenance program;*
> *(d) Update program elements, as appropriate, based on monitoring or performance evaluations; and*
> *(e) Identify and illustrate SSO trends, including: frequency, location, and volume."*
> -State Water Resources Control Board Order No. 2006-0003-DWQ, Statewide General WDR for Sanitary Sewer System)

City of Willits Monitoring, Measurement, and Modification Program

The City of Willits established its SSMP in 2010. The SSMP outlines City programs with respect to the sewer collection system. The document is reviewed regularly and revised as changes are necessary. In addition, as required by SWRCB Order No. 2006-0003-DWQ, the City's SSMP will be audited every two years by City staff. During these audits the City will review the effectiveness of program implementation and update programs where necessary.

9a. Information Maintenance for Prioritizing SSMP Activities

The City of Willits maintains information on SSMP related system deficiencies as problems are discovered through inspections or SSO events. This information is maintained by operators on a map at the WWTP, in the Granite XP inspection software, and in a collections system logbook. Maintaining such information helps the Sewer Department prioritize maintenance, repair, and replacement activities. The collected data is analyzed on a periodic basis to determine trends that may be indicators of a potential failure due to blockages, deterioration, or other causes. The following programs are currently used for information recording:

- Granite XP Inspection Software
- CIWQS State Water Quality Control Board Reporting System

9b. SSMP Implementation Monitoring

The City's SSMP is evaluated on an ongoing basis, as changes arise the document is revised. The document is reviewed biannually in its entirety to determine whether any sections are obsolete or require adjustments. The SSMP is a living document that evolves as the collection system policies and procedures change. As part of the bi-annual review, the effectiveness of each element is evaluated to determine the efficiency of each element.

9c. Preventative Maintenance Program Assessment

The City maintains the sewer collection system by inspecting and cleaning sewer lines on a regularly scheduled basis. Collection system maintenance includes preventative inspection of the City's lift station. Root control is done on an as needed basis. Maintenance activities are recorded for future analysis. Preventative maintenance activities have resulted in early detection of failures in the system. Problems detected in the system are prioritized for repair using the Pipeline Assessment and Certification Program ("PACP") rating system. The City endeavors to repair system deficiencies on a preventative, rather than emergency basis. The City utilizes CCTV and visual inspection methods.

9d. Preventative Maintenance Program Updates

Preventative maintenance activities are tracked for analysis. The program is updated as changes are necessary. The SSMP is reviewed biannually to identify areas that require revision.

9e. SSO Identification and Mapping

Data on spills and blockages are collected in a collections system logbook and on a map at the WWTP and in the CIWQS database maintained by SWQCB. After spills occur, information is collected on the event. This information includes volume, location, cause, and frequency. These data collection methods are used to identify and illustrate SSO trends. When trends are identified, preventative maintenance is scheduled to ensure that the spill is not repeated. Preventative maintenance includes cleaning of critical and non-critical areas by rodding, jetting, vacuuming, chemical root control, sewer line spot repairs, and CCTV inspections.

References

- WWTP operator collection system logbook
- CIWQS Database, http://ciwqs.waterboards.ca.gov/

Element 10 - Internal Audits

This element of the SSMP outlines the City's Internal Audits Program. This section complies with the internal audits requirements outlined in the WDR SSMP Element 10 requirements.

As stated by the State Water Resources Control Board Order No. 2006-0003-DWQ, Statewide General WDR for Sanitary Sewer Systems the Internal Audits Program shall address the following components:

> *"As part of the SSMP, the Enrollee shall conduct periodic internal audits, appropriate to the size of the system and the number of SSOs. At a minimum, these audits must occur every two years and a report must be prepared and kept on file. This audit shall focus on evaluating the effectiveness of the SSMP and the Enrollee's compliance with the SSMP requirements identified in this subsection (D.13), including identification of any deficiencies in the SSMP and steps to correct them."*
> - State Water Resources Control Board Order No. 2006-0003-DWQ, Statewide General WDR for Sanitary Sewer Systems

City of Willits Internal Audits Program

The City of Willits conducts biannual audits of the SSMP to measure the effectiveness and budgetary requirements of the program. The SSMP is revised as regulation and circumstances change. This audit occurs in preparation for the coming fiscal year budget to incorporate the fiscal needs of the program in the budgetary process.
Annual budgetary considerations include: Capital Improvement Projects, regular maintenance needs, correcting I&I problems, spot repairs, developing employee skills and certifications. The following information is tracked and used to determine program effectiveness during annual audits:

1. SSOs
2. Length of pipe inspected
3. FOG inspections conducted as needed
4. Length of pipe cleaned
5. Quality of facilities maintained
6. Length of pipe repaired

References

- WWTP operator collections system logbook

Element 11 – Communications Program

This element of the SSMP outlines the City's Communications Program. This section complies with the communications requirements outlined in the WDR SSMP Element 11 requirements.

As stated by the State Water Resources Control Board Order No. 2006-0003-DWQ, Statewide General WDR for Sanitary Sewer Systems the Communications Program shall address the following components:

> *"The Enrollee shall communicate on a regular basis with the public on the development, implementation, and performance of its SSMP. The communication system shall provide the public the opportunity to provide input to the Enrollee as the program is developed and implemented. The Enrollee shall also create a plan of communication with systems that are tributary and/or satellite to the Enrollee's sanitary sewer system"*
> -State Water Resource Control Board Order No. 2006-0006-DWQ, Statewide General WDR for Sanitary Sewer Systems

City of Willits Communications Program

The City has established a communications program by posting the SSMP and proposed sewer ordinance changes on the City website for public review and comment. Council agenda packets are posted online for public viewing prior to meetings, giving residents a chance to review the proposed plan. Meetings are open to the public and televised locally; therefore, the public has an opportunity to offer input on the plan during this process. In addition, during the Sewer Ordinance revision, the proposed changes were posted online for public input. As programs are implemented and changes are made, the City endeavors to communicate changes proactively as resources are available. Changes adopted by Council are part of a public forum. This offers the public direct access to the City Council members as they discuss the SSMP and Sewer Ordinance adoption. The City also plans to establish a public outreach program to educate the public on proper handling of fats, oils and grease. This program will be implemented as staff time allows.

As the various elements of the SSMP are being implemented, continuous evaluation of performance measures will provide the necessary feedback for adjustments needed to fulfill the goals of the program. The City's website will provide information on the SSMP and offer the public a method of emailing comments to the Sewer Department.

References

- *FAQ about Cooking Oil and Grease Disposal*
- City of Willits website, www.thecityofwillits.com

References

Element 3- Legal Authority
• *City of WMC*, Title 13, Sewers
https://www.municode.com/library/ca/willits/codes/code_of_ordinances?nodeId=TIT13SE
• Sewer Agreement – Brooktrails Township Community Services
• Sewer Agreement – Sherwood Valley Band of Pomo Indians
• Sewer Agreement – Meadowbrook Manor County Sanitary District

Element 4 - Operations and Maintenance Program
• *City of Willits Sewer System Map (in Appendices)*
• *Capital Improvement Project List, City of Willits Fiscal Year Budget*
• *City of Willits Sewer Department Work Order*
• *7 Minute Minder (Training resource)*
• *Critical Equipment and Replacement Parts Inventory*

Element 5 – Design and Performance Provisions
• *City of Willits Design and Construction Standards (Sewer Sections),* http://thecityofwillits.com/city-standards-documents *(in Appendices)*

Element 6: Overflow Emergency Response Plan
• *Willits SSO and Backup Plan (in Appendices)*
• *SSO and Backup Response Plan Field Guide*
• *Emergency Vendor Contact Sheet*
• *Regulatory Notification Packet*
• *Willits Backup Packet*
• *Public Notification Door Hangers*
• *Willits Overflow Packet*
• *SSO Public Posting*

Element 7 – FOG Program, Fats, Oils and Grease Plan & Program
• *WDP (in Appendices)*
• *FOG Source Control Program Summary (in Appendices)*
• *City of Willits Grease Interceptor Policy*
• *FOG Public Outreach Program samples*
• *City of Willits Design and Construction Standards*
• List of Grease Haulers Service Vendors
• List of Grease Removal Device Manufacturers
• *Enforcement Response Plan*

Element 8 – System Evaluation & Capacity Assurance
• *City of Willits Final Budget,* FY 15-16
• *Sewer Department Capital Improvement Master List*

Element 9 - Monitoring, Measurement, and Modification
• WWTP operator collections system logbook
• CIWQS Database, http://ciwqs.waterboards.ca.gov/

Element 10 – Internal Audits

• WWTP operator collections system logbook

Element 11 - Communications Program

• *FAQ about Cooking Oil and Grease Disposal*

• City of Willits website, www.thecityofwillits.com

APPENDICES

City Sewer System Map…….…….42
City of Willits Design and Construction Standards, Sewer Sections ……....43
Overflow Emergency Response Plan...……...…….....70
City of Willits FOG Discharge Application……...…….....153
City of Willits Example FOG Discharge Permit…….…….....155

DATE: 02/22/2008	REVISIONS:	MAGNETIC	SEWER MANHOLE LOCATIONS CITY OF WILLITS, CALIFORNIA		City of Willits Engineering Department 380 East Commercial St. Willits, California 95490-3188
DRAWN BY:					
CHECKED:					
PROJECT #:					
SHEET 1 OF 1		SCALE: 1"=1000'			

SEWER STANDARD PLANS

DESCRIPTION

300 SERIES - SEWERS

300	Standard Trench Detail
301	Standard 48" Diameter Manhole
302	Standard 60" Diameter Manhole
303	Standard Manhole Frame and Cover
304	Inside Drop Inlet Manhole
305	Outside Drop Inlet Manhole
306	Standard Pre-cast Concrete Manhole Reducer Slabs
307	Permanent Mainline Cleanout
308	Temporary Mainline Cleanout
309	Sewer Service Lateral
310	Typical Sewer Service Connection Details
311	Discharge for Private Force Main
312	Abandoned Pipe Plug Detail
313	Abandoned Manhole Detail
314	Plastic Sewer Pipe Deflection Gage
315	Pipe - Pipe Crossing Details
316	Pipe - Structure Crossing Details
317	Precast Grease Interceptor
318	Sand and Grease Interceptor
319	Sampling Manhole Exterior Use
320	Sampling Box Building Interior

DRAFT

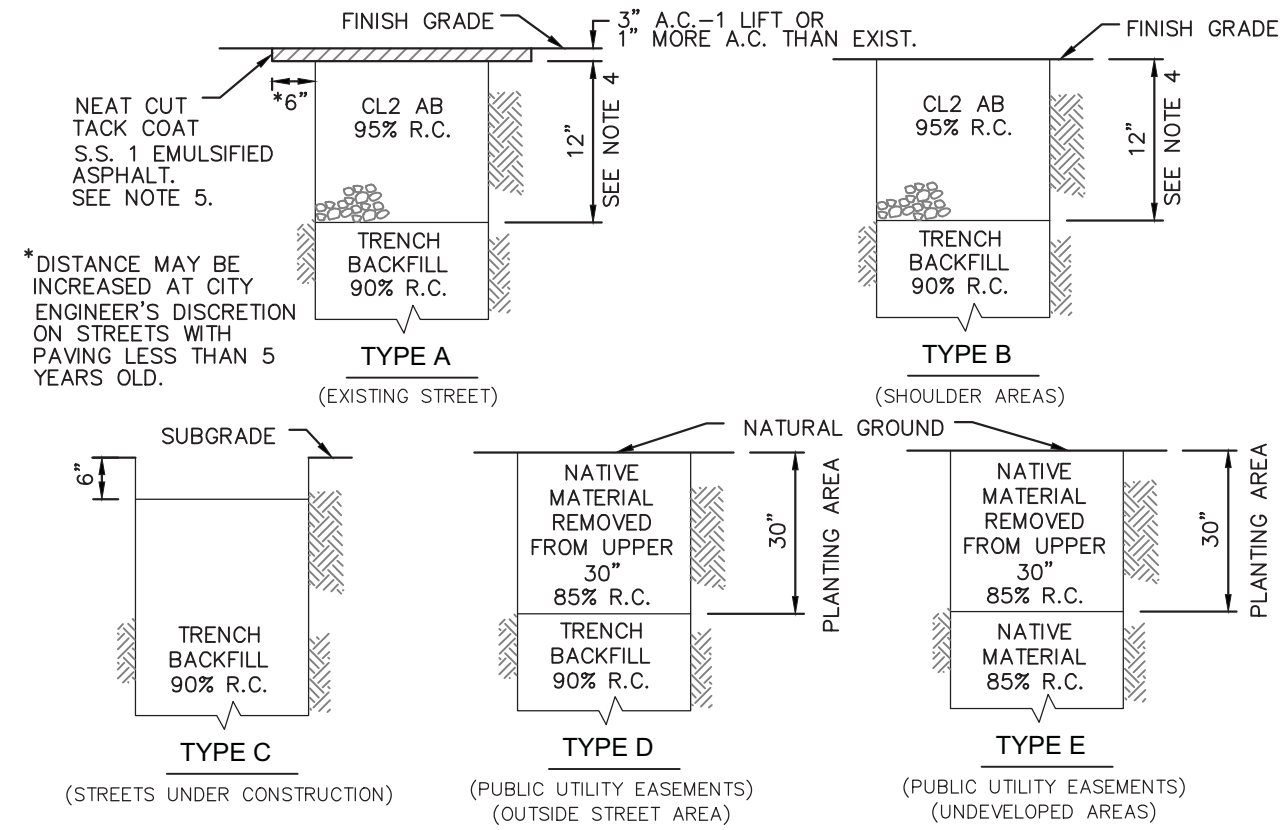

TRENCH BACKFILL AND SURFACING

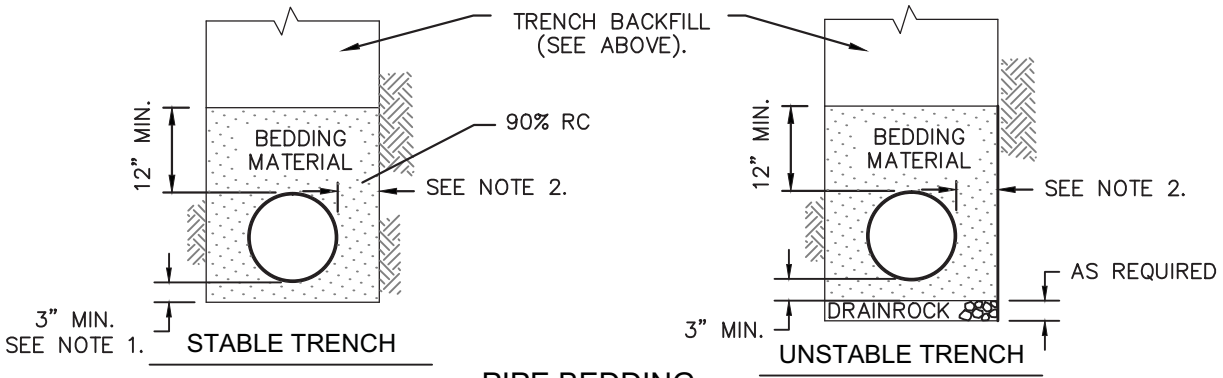

PIPE BEDDING

NOTES:

1. 1/4 PIPE O.D. OR 4" MIN. WHEN EXCAVATION IS IN ROCKY GROUND.
2. PIPE DIAMETER 18" OR LESS: 6" MIN., 9" MAX. PIPE DIAMETER GREATER THAN 18": 9" MIN., 12" MAX.
3. RELATIVE COMPACTION DESIGNATED R.C.
4. THE STREET STRUCTURAL SECTION SHALL BE A MIN. OF 3" A.C. ON 12" A.B. OR MATCH EXISTING PAVEMENT THICKNESS PLUS 1" A.C., WHICHEVER IS THICKER OR AS SPECIFIED ON PLANS.
5. NEATLY CUT PAVEMENT SIX INCHES FROM EDGE OF TRENCH AFTER TRENCH IS BACKFILLED.
6. CHECK DAMS (SEE SPECIFICATIONS)

SHEET 1 OF 2

CITY OF WILLITS	STANDARD TRENCH DETAIL				STD. NO. 300
	SCALE: NONE	DRAWN: TM	CHK: TM	APPVD: Thomas M Mannatt	DATE: OCT 2009

MATERIAL SPECIFICATIONS:

DRAFT

DRAIN ROCK SHALL BE EITHER OF THE NOMINAL SIZES DESIGNATED AS 1–1/2" BY 3/4" OR 2–1/2" BY 1–1/2".

PIPE BEDDING AND TRENCH BACKFILL MATERIAL SHALL BE A WELL GRADED AGGREGATE (PEA GRAVEL WILL NOT BE ACCEPTED) MATERIAL AND SHALL HAVE A MINIMUM SAND EQUIVALENT VALUE OF 30 AND SHALL CONFORM TO THE FOLLOWING GRADINGS:

	PERCENT PASSING			
	3"	1"	3/4"	NO. 4
PIPE BEDDING		100	95–100	55–100
TRENCH BACKFILL	100			40–100

AGGREGATE BASE SHALL BE CLASS 2, 1–1/2" MAX. OR 3/4" MAX CONFORMING TO THE PROVISIONS OF SECTION 26 OF THE STATE STANDARD SPECIFICATIONS.

NATIVE MATERIAL SHALL NOT CONTAIN ROCKS LARGER THAN 3".

COMPACTION REQUIREMENTS: (AS SHOWN ON SHEET 1 AND IN THE FOLLOWING MODIFICATIONS).

DRAIN ROCK SHALL BE CONSOLIDATED WITH A SURFACE VIBRATOR.

PIPE BEDDING MATERIAL USED TO GRADE THE TRENCH SHALL BE CONSOLIDATED WITH A SURFACE VIBRATOR WHEN IT IS PLACED OVER DRAIN ROCK OR WHEN DEPTH IS GREATER THAN 12".

PIPE BEDDING MATERIAL SHALL EITHER BE HAND TAMPED UNDER AND AT THE SIDES OF THE PIPE IN LIFTS NOT GREATER THAN 6" OR SHAPED AND COMPACTED PRIOR TO PIPE INSTALLATION.

GENERAL: THE COMPACTION REQUIREMENTS SHALL BE ACHIEVED UTILIZING METHODS AND EQUIPMENT APPROVED BY THE CITY. ANY METHOD OF COMPACTION WHICH FAILS TO UNIFORMLY ACHIEVE THE REQUIRED LEVELS OF COMPACTION THROUGHOUT THE LENGTH AND DEPTH OF TRENCHES SHALL BE DISCONTINUED. COMPACTION METHODS AND EQUIPMENT SHALL BE SUCH AS NOT TO DAMAGE THE INSTALLED PIPE, EXCEED ITS LOADING CAPACITY, OR DISTURB ITS ALIGNMENT. FLOODING, PONDING, OR THE USE OF DROP HAMMER TYPE COMPACTION EQUIPMENT WILL NOT BE ALLOWED.

MECHANICAL COMPACTION: TRENCH BACKFILL SHALL BE PLACED IN UNIFORM, HORIZONTAL LAYERS NOT EXCEEDING EIGHT (8) INCHES IN THICKNESS BEFORE COMPACTION. EACH LAYER SHALL BE COMPACTED, USING MECHANICAL MEANS, TO THE SPECIFIED DENSITY SHOWN ON THE PLANS.

THE CONTRACTOR MAY, AT HIS SOLE OPTION AND AT HIS SOLE EXPENSE, CONSTRUCT A TEST TRENCH SECTION WHICH DEMONSTRATES METHODS, EQUIPMENT, OR MATERIALS WHICH WILL RELIABLY ACHIEVE THE REQUIRED COMPACTION IN LIFTS GREATER THAN 8 INCHES. AT ITS SOLE DISCRETION, THE CITY MAY INCREASE THE MAXIMUM ALLOWABLE LIFT THICKNESS PERMITTED BASED UPON THE RESULTS DEMONSTRATED BY THE TEST TRENCH SECTION. SHOULD SUBSEQUENT TESTING DEMONSTRATE THAT THE REQUIRED COMPACTION IS NOT BEING RELIABLY ACHIEVED, THE CITY MAY, AT ITS SOLE DISCRETION, REDUCE THE MAXIMUM LIFT THICKNESS TO ITS ORIGINAL VALUE OF 8 INCHES.

JETTING: JETTING IS NOT ALLOWED.

CITY OF WILLITS 1888

STANDARD TRENCH DETAIL

STD. NO. 300

SCALE: NONE	DRAWN: TM	CHK: TM	APPVD: Thomas M Monnett	DATE: OCT 2009

DRAFT

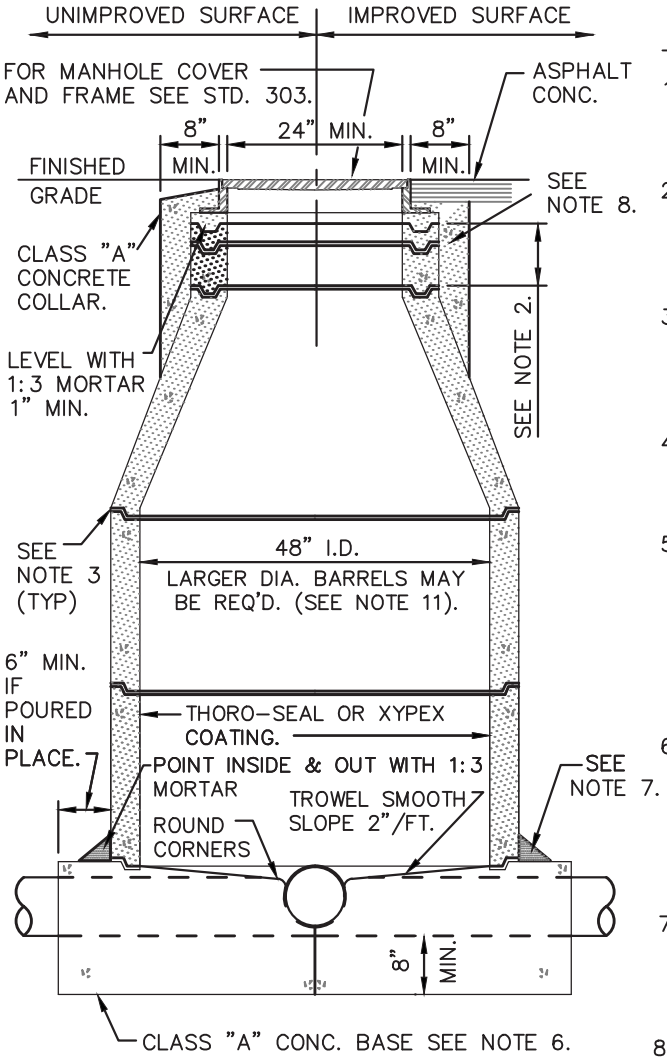

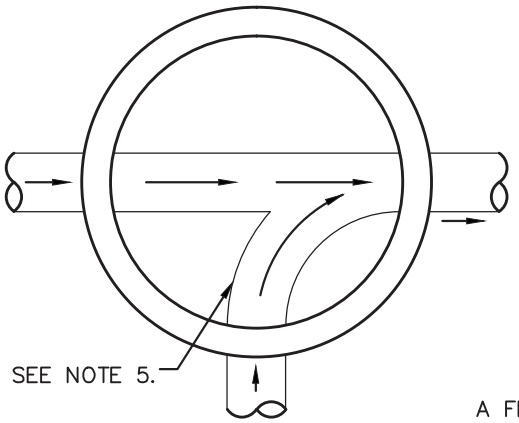

MANHOLE BASE

CHANNELIZATION PLAN

NOTES:

1. WHEN MANHOLES ARE INSTALLED IN UNIMPROVED AREAS, THE TOP OF THE COVER SHALL BE A MIN. OF 1 FOOT ABOVE ADJACENT FINISHED GRADE.
2. MIN. OF ONE 3" AND ONE 6" GRADE ADJUSTMENT RINGS. MAX. HEIGHT OF GRADE ADJUSTMENT RINGS = 20". ALTERNATELY, CONTRACTOR MAY CAST GRADE ADJUSTMENT RINGS IN PLACE.
3. SET ALL BARREL SECTIONS & TAPER SECTIONS IN PLASTIC GASKET, RAM-NEK OR APPROVED ALTERNATE. TYP JOINT 1-1/2" (3/4 X 2-1/2") RAM-NEK SEAL. (2 SEALS IN HIGH WATER TABLE AREAS).
4. CONE SECTION (TAPER) MUST BE CONCENTRIC FOR 48" MANHOLE UNLESS OTHERWISE SPECIFIED AND APPROVED BY THE CITY ENGINEER.
5. CONSTRUCT ALL FLOW CHANNELS OF PIPE WHEREVER POSSIBLE. AFTER LOWER RING SECTION IS SET, BREAK OUT TOP HALF OF PIPE FLUSH WITH INSIDE FACE OF M.H. WALL AND CONSTRUCT SHELF AND U-SHAPED CHANNEL. MAKE ELEVATION CHANGES GRADUALLY AND DIRECTIONAL CHANGES WITH SMOOTH CURVES.
6. POURED-IN-PLACE BASE SHALL BE POURED FULL THICKNESS TO UNDISTURBED SIDES OF EXCAVATION OR SHALL BE FORMED. PRECAST BASE TO BE FROM A DISTRICT APPROVED LIST AND PLACED ON 12" THICK 3/4" DRAIN ROCK SUBBASE INSTALLED AGAINST UNDISTURBED EARTH.
7. JOINT BETWEEN BASE AND BARREL TO BE SEALED W/1-1/2" (3/4" X 2-1/2") RAM-NEK SEAL (2 SEALS IN HIGH WATER TABLE AREAS), AND PLASTER 6" FILLET, 1:3 MORTAR.
8. CLASS "A" CONC. COLLAR SHALL BE 2" BELOW FINISHED GRADE.
9. STANDARD MANHOLE BARREL SECTION PER ASTM C478.
10. BARREL AND TAPER SECTIONS MAY BE CAST IN PLACE AS APPROVED BY THE CITY ENGINEER.
11. 48" I.D. M.H. TO BE USED ONLY FOR SEWER MAINS LESS THAN 18" DIAMETER AND LESS THAN 8 FT. DEEP FROM FINISHED GRADE. 60" I.D. MANHOLES PER STD. 302 FOR ALL OTHER APPLICATIONS.
12. ALL SECTIONS OF MANHOLE MUST BE OF IDENTICAL MAKE AND MANUFACTURER.
13. MANHOLE SHALL BE DEWATERED AND DRY PRIOR TO INSPECTION.

A FLEXIBLE COUPLING, AS APPROVED BY THE CITY ENGINEER, SHALL BE INSTALLED IN THE SEWER MAIN WITHIN 12" OF THE BASE OF THE MANHOLE (TYP). NOT REQUIRED WHEN PRECAST BASES ARE MANUF. W/FLEX. CPLGS. ALREADY INSTALLED.

CITY OF WILLITS	STANDARD 48" DIA. PRECAST CONCRETE MANHOLE SANITARY SEWER				STD. NO. 301
	SCALE: NONE	DRAWN: TM	CHK: TM	APPVD: Thomas M Mannatt	DATE: OCT 2009

DRAFT

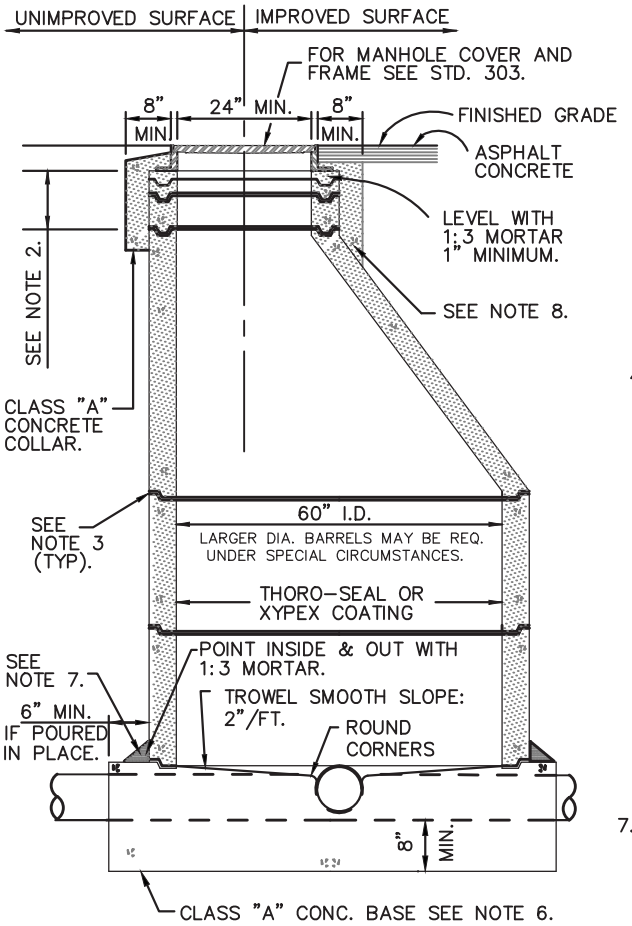

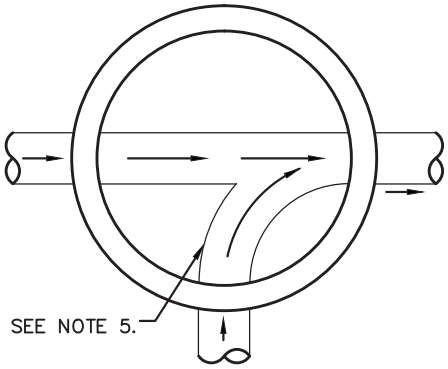

MANHOLE BASE

CHANNELIZATION PLAN

NOTES:

1. WHEN MANHOLES ARE INSTALLED IN UNIMPROVED AREAS, THE TOP OF THE COVER SHALL BE A MIN. OF 1 FOOT ABOVE ADJACENT FINISHED GRADE.
2. MIN. OF ONE 3" AND ONE 6" GRADE ADJUSTMENT RINGS. MAX. HEIGHT OF GRADE ADJUSTMENT RINGS = 20". ALTERNATELY, CONTRACTOR MAY CAST GRADE ADJUSTMENT RINGS IN PLACE.
3. SET ALL BARREL SECTIONS & TAPER SECTIONS IN PLASTIC GASKET, RAM-NEK OR APPROVED ALTERNATE. TYP JOINT 1-1/2" (3/4" X 2-1/2")RAM-NEK SEAL (2 SEALS IN HIGH WATER TABLE AREAS).
4. CONE SECTION (TAPER) MUST BE ECCENTRIC FOR 60" MANHOLE UNLESS OTHERWISE SPECIFIED AND APPROVED BY THE CITY ENGR.
5. CONSTRUCT ALL FLOW CHANNELS OF PIPE WHEREVER POSSIBLE. AFTER LOWER RING SECTION IS SET, BREAK OUT TOP HALF OF PIPE FLUSH WITH INSIDE FACE OF M.H. WALL AND CONSTRUCT SHELF AND U-SHAPED CHANNEL. MAKE ELEVATION CHANGES GRADUALLY AND DIRECTIONAL CHANGES WITH SMOOTH CURVES.
6. POURED-IN-PLACE BASE SHALL BE POURED FULL THICKNESS TO UNDISTURBED SIDES OF EXCAVATION OR SHALL BE FORMED. PRECAST BASE TO BE FROM DISTRICT APPROVED LIST AND PLACED ON 12" THICK 3/4" DRAIN SUB-BASE INSTALLED AGAINST UNDISTURBED EARTH.
7. JOINT BETWEEN BASE AND BARREL TO BE SEALED W/1-1/2" (3/4" X 2-1/2") RAM-NEK SEAL (2 SEALS IN HIGH WATER TABLE AREAS), AND PLASTER 6" FILLET, 1:3 MORTAR.
8. CLASS "A" CONC. COLLAR SHALL BE 2" BELOW FINISHED GRADE.
9. STANDARD MANHOLE BARREL SECTION PER ASTM C478.
10. BARREL AND TAPER SECTIONS MAY BE CAST IN PLACE AS APPROVED BY THE CITY ENGINEER.
11. 60" I.D. MANHOLE TO BE USED FOR ALL TRUNK AND COLLECTOR SEWERS 18" TO 30" PR WHERE DIMENSION FROM FINISHED GRADE TO THE SEWER FLOW LINE IS GREATER THAN 8'-0", AS INDICATED ON THE DESIGN PLAN.
12. ALL SECTIONS OF MANHOLE MUST BE OF IDENTICAL MAKE AND MANUFACTURER.
13. ALL SECTIONS OF MANHOLE MUST BE OF IDENTICAL MAKE AND MANUFACTURER.
14. MANHOLE SHALL BE DEWATERED AND DRY PRIOR TO INSPECTION.

A FLEXIBLE COUPLING, AS APPROVED BY THE CITY ENGINEER, SHALL BE INSTALLED IN THE SEWER MAIN WITHIN 12" OF THE BASE OF THE MANHOLE (TYP). NOT REQUIRED WHEN PRECAST BASES ARE MANUF. W/FLEX. CPLGS. ALREADY INSTALLED.

CITY OF WILLITS	STANDARD 60" DIA. PRECAST CONCRETE MANHOLE SANITARY SEWER			STD. NO. 302
SCALE: NONE	DRAWN: TM	CHK: TM	APPVD: Thomas M Mannatt	DATE: OCT 2009

DRAFT

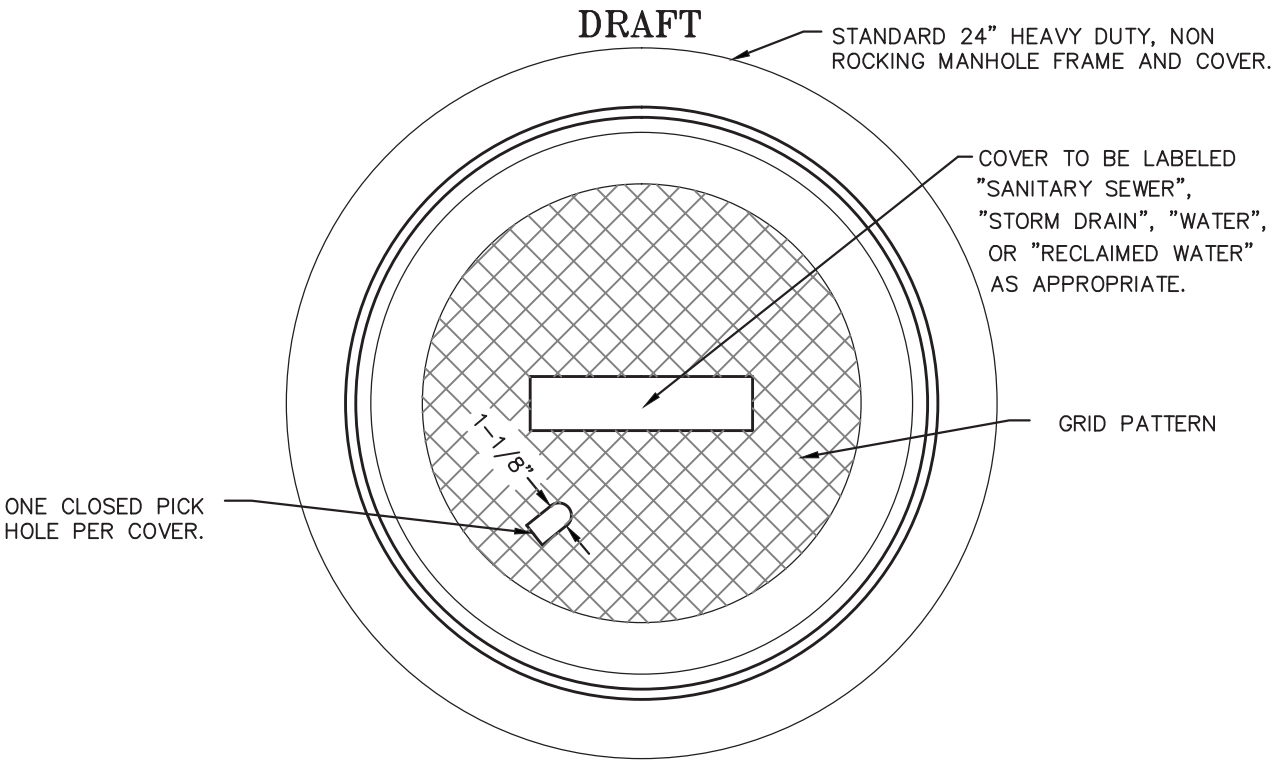

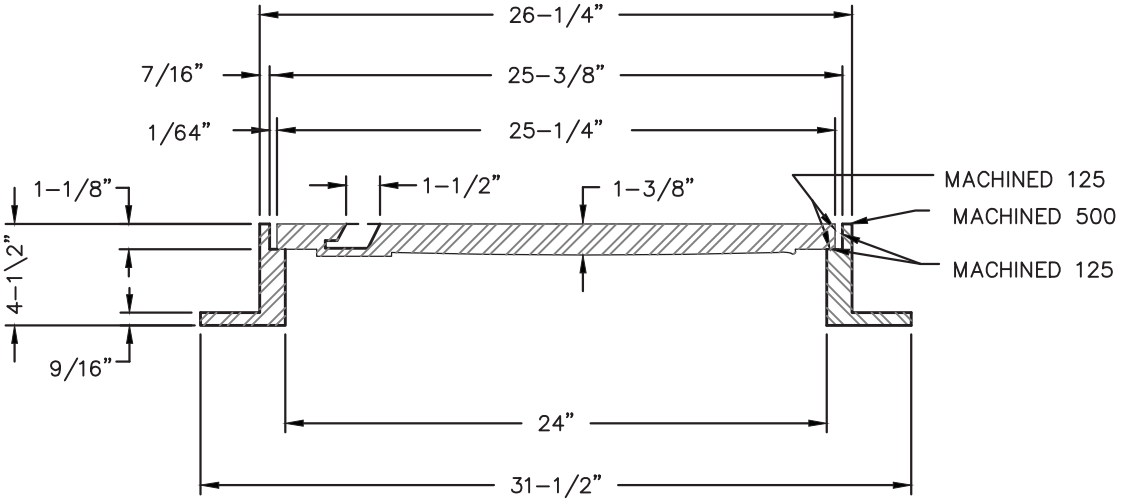

NOTES:

1. SPECIFY SANITARY SEWER WHEN ORDERING.
   ALL CASTINGS SHALL BE DIPPED IN APPROVED ASPHALT PAINT.
2. ALL MATERIAL USED IN MANUFACTURING SHALL CONFORM TO A.S.T.M. DESIGNATION 48-30, OR TO UNITED STATES GOVERNMENT SPECIFICATIONS QQI-652B.
3. MINIMUM WEIGHT COMPONENTS: COVER - 130 POUNDS
   FRAME - 135 POUNDS
4. SEE CITY'S APPROVED LIST FOR MANHOLE FRAME AND COVER.

CITY OF WILLITS	STANDARD MANHOLE FRAME AND COVER				STD. NO. 303
	SCALE: NONE	DRAWN: TM	CHK: TM	APPVD: Thomas M Mannatt	DATE: OCT 2009

DRAFT

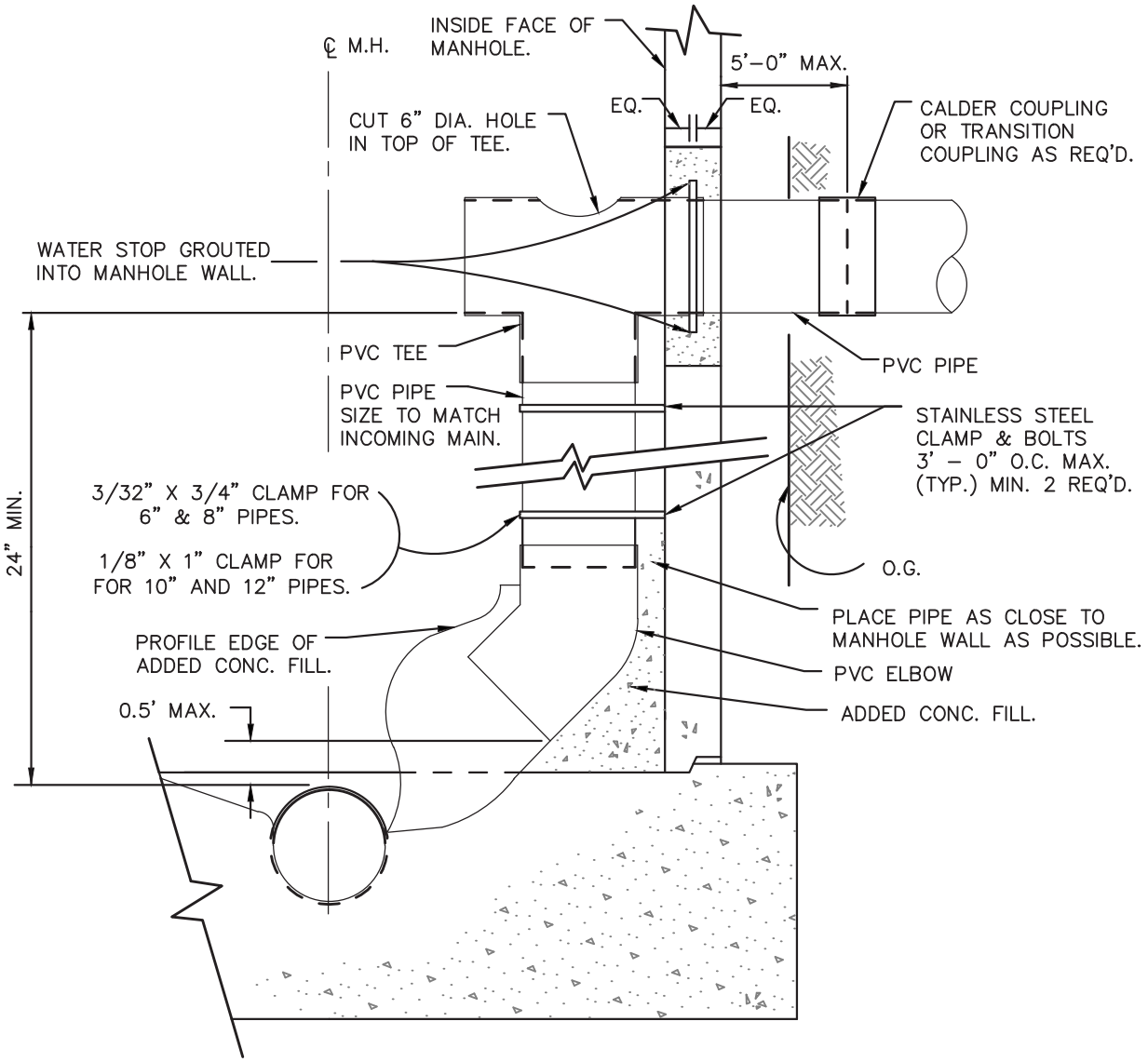

1. INSTALL WATERTOP IN ACCORDANCE WITH MANUFACTURER'S INSTRUCTIONS AS SHOWN.
2. NEW MANHOLES CONSTRUCTED USING THIS STANDARD SHALL BE 60 INCHES IN DIAMETER, & INSTALLED IN CONFORMANCE WITH STD. 302.
3. ENCLOSE ELBOW IN CONCRETE. FORM SMOOTH CHANNEL TO MANHOLE FLOWLINE.
4. PVC PIPE AND FITTINGS TO BE SDR 35 OR SCH 40.

CITY OF WILLITS	INSIDE DROP INLET SANITARY SEWER MANHOLE				STD. NO. 304
	SCALE: NONE	DRAWN: TM	CHK: TM	APPVD: Thomas M Mannatt	DATE: OCT 2009

DRAFT

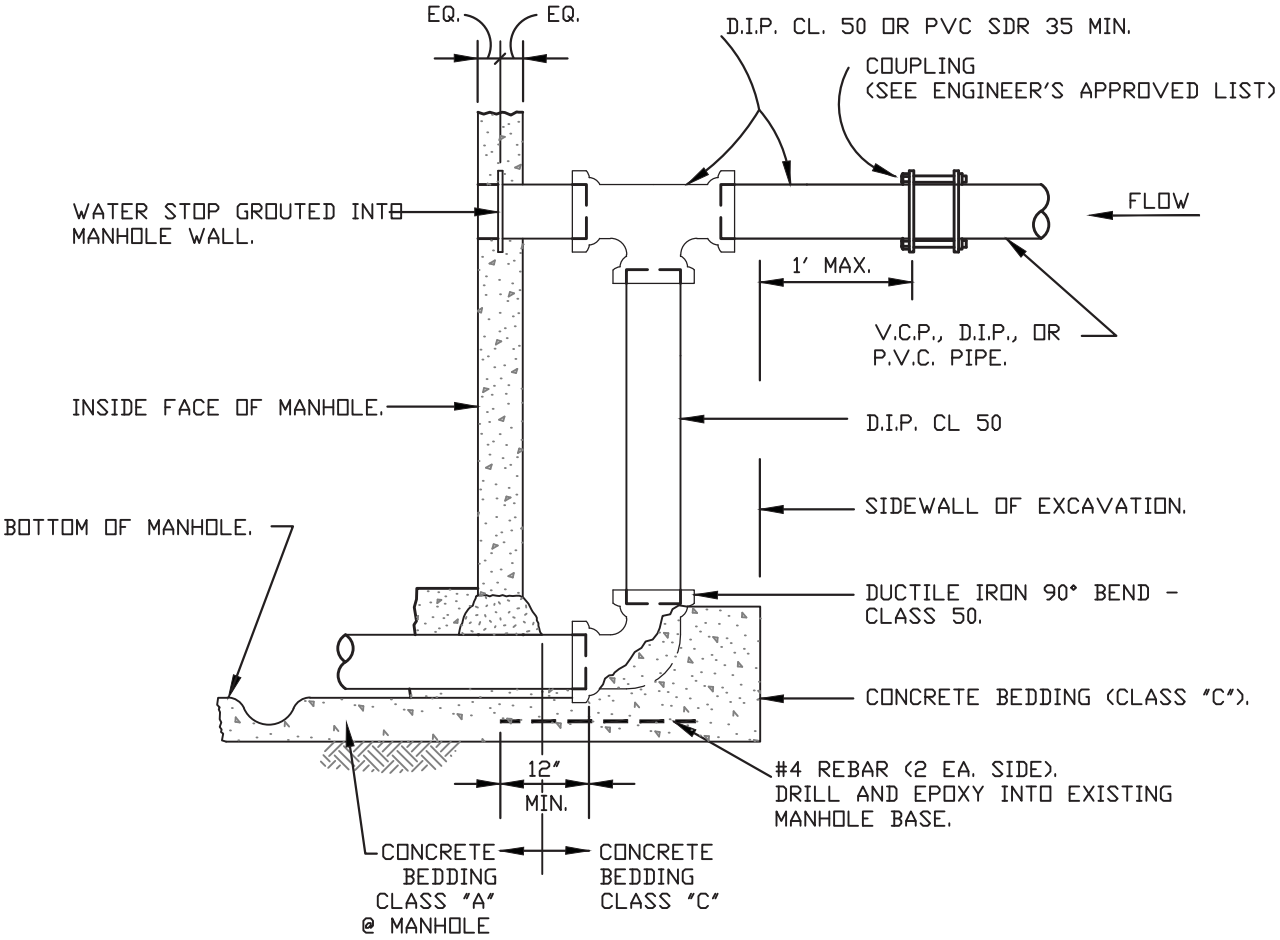

NOTES:

1. DUCTILE IRON PIPE AND FITTINGS SHALL BE CLASS 50 CONFORMING TO THE REQUIREMENTS OF ANSI A21.51.
2. PIPE AND FITTINGS SHALL BE FURNISHED WITH BELL AND SPIGOT ENDS, "TYTON JOINT" OR MECHANICAL JOINTS.
3. TO BE INSTALLED AT EXISTING 48" MANHOLES OR WHERE SPECIFICALLY APPROVED BY THE CITY ENGINEER.
4. DROP INLET PIPE AND FITTINGS SHALL BE THE SAME SIZE AS THE INCOMING SEWER MAIN.
5. SEE STANDARD 304 FOR STANDARD INSIDE DROP INSTALLATION.
6. INSTALL WATER STOP IN ACCORDANCE WITH MANUFACTURER'S INSTRUCTIONS AS SHOWN.

CITY OF WILLITS	DUCTILE INRON FITTINGS FOR OUTSIDE DROP INLET MANHOLE				STD. NO. 305
	SCALE: NONE	DRAWN: TM	CHK: TM	APPVD: Thomas M Mannatt	DATE: OCT 2009

DRAFT

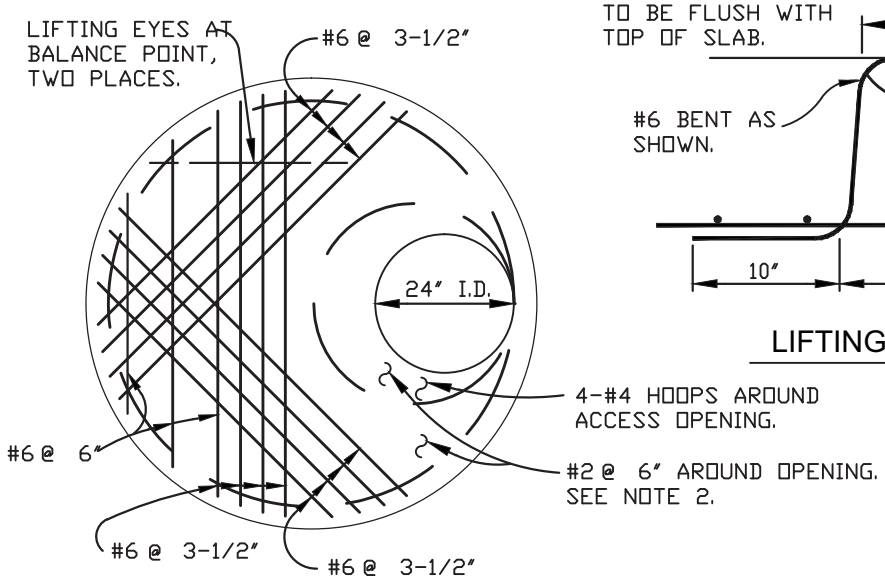

SLAB PLAN

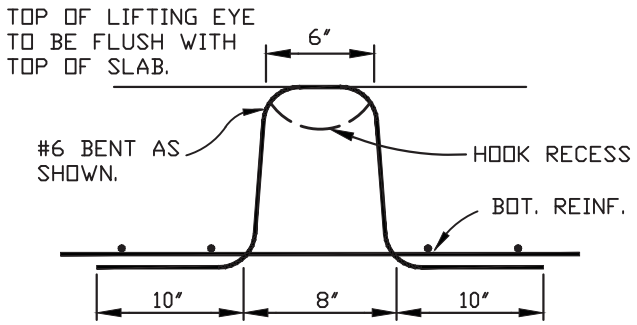

LIFTING EYE DETAIL

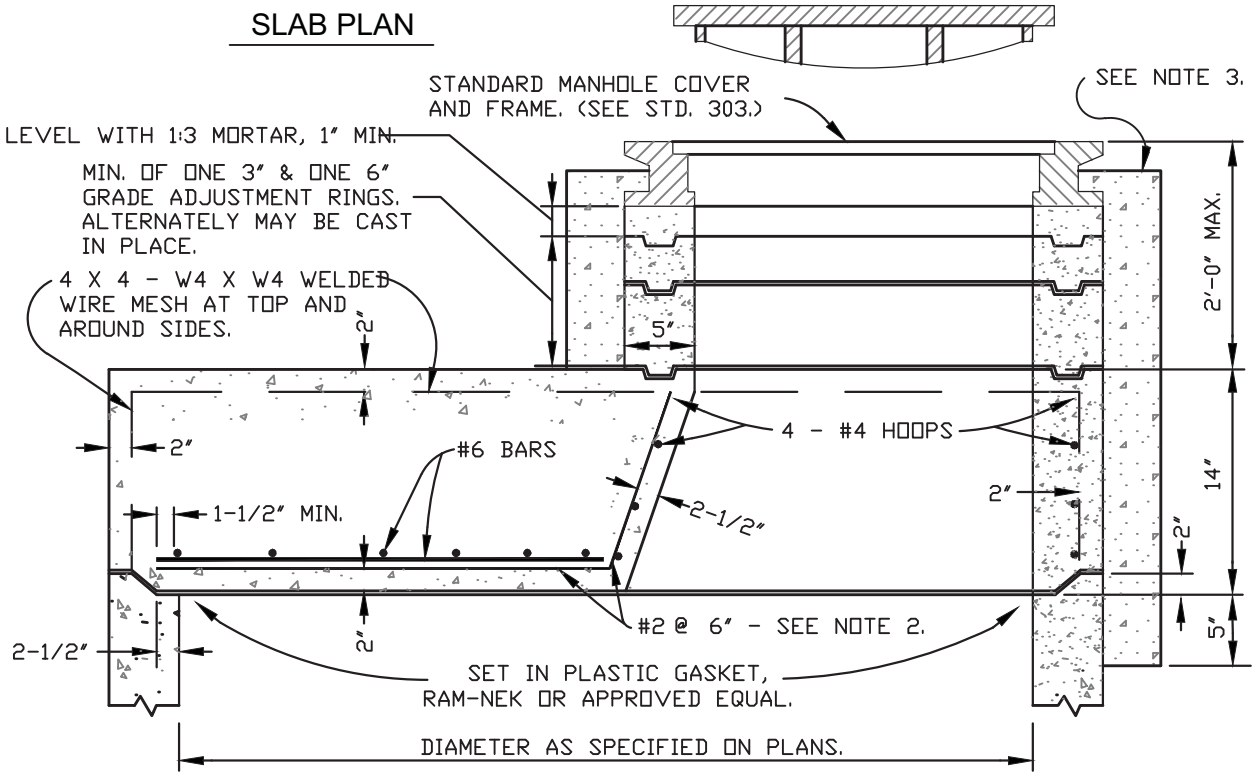

NOTES:

1. FOR DETAILS AND SPECIFICATIONS OF BASE AND BARREL SECTIONS, SEE STDS. 301 & 302.
2. #2 BARS BENT UP AND SPACED 6" O.C. AROUND 24" OPENING. HORIZONTAL LEGS TO FAN OUT EQUALLY SPACED, TO 2-1/2" CLEAR AT EDGE OF SLAB.
3. CLASS "A" CONCRETE COLLAR.

CITY OF WILLITS	STANDARD PRECAST CONCRETE MANHOLE REDUCER SLAB SANITARY SEWER			STD. NO. 306
	SCALE: NONE	DRAWN: TM	CHK: TM	APPVD: Thomas M Mannatt	DATE: OCT 2009

DRAFT

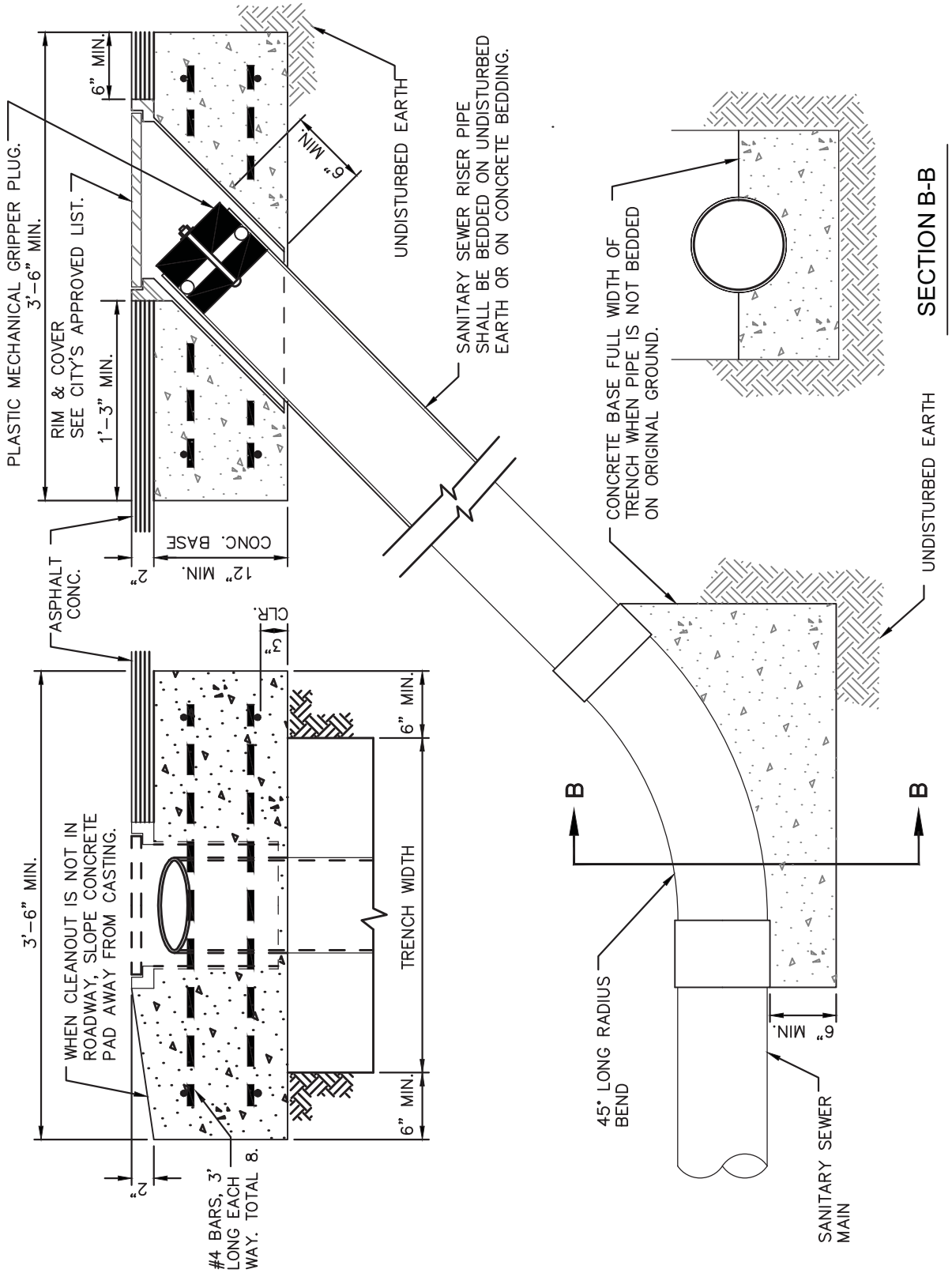

CITY OF WILLITS	PERMANENT MAINLINE CLEANOUT				STD. NO. 307
	SCALE: NONE	DRAWN: TM	CHK: TM	APPVD: Thomas M Monnatt	DATE: OCT 2009

DRAFT

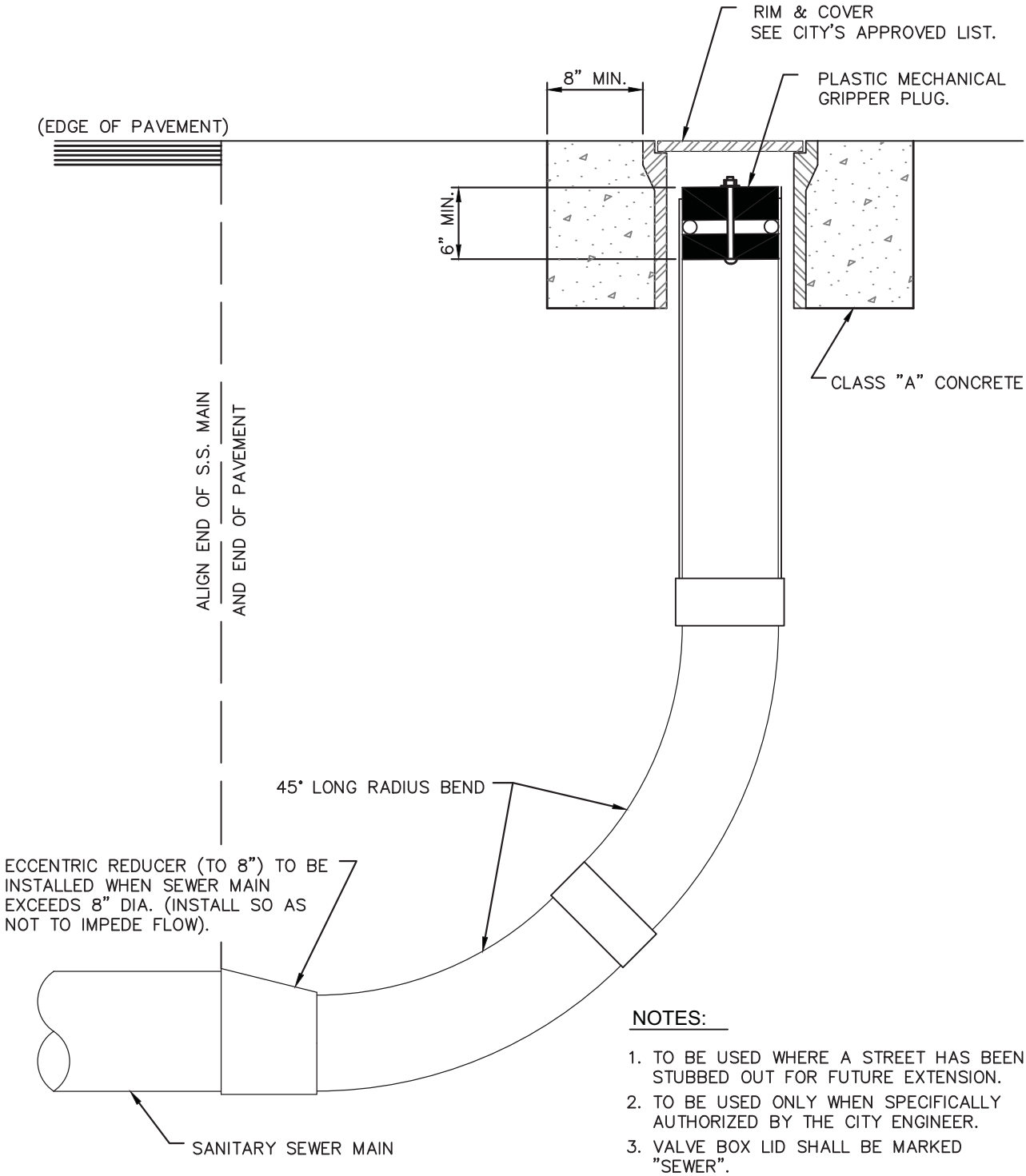

NOTES:

1. TO BE USED WHERE A STREET HAS BEEN STUBBED OUT FOR FUTURE EXTENSION.
2. TO BE USED ONLY WHEN SPECIFICALLY AUTHORIZED BY THE CITY ENGINEER.
3. VALVE BOX LID SHALL BE MARKED "SEWER".
4. EASEMENT ACQUISITION MAY BE REQ'D.

SHEET 1 OF 2

CITY OF WILLITS	TEMPORARY MAINLINE CLEANOUT				STD. NO. 308
	SCALE: NONE	DRAWN: TM	CHK: TM	APPVD: Thomas M Mannatt	DATE: OCT 2009

DRAFT

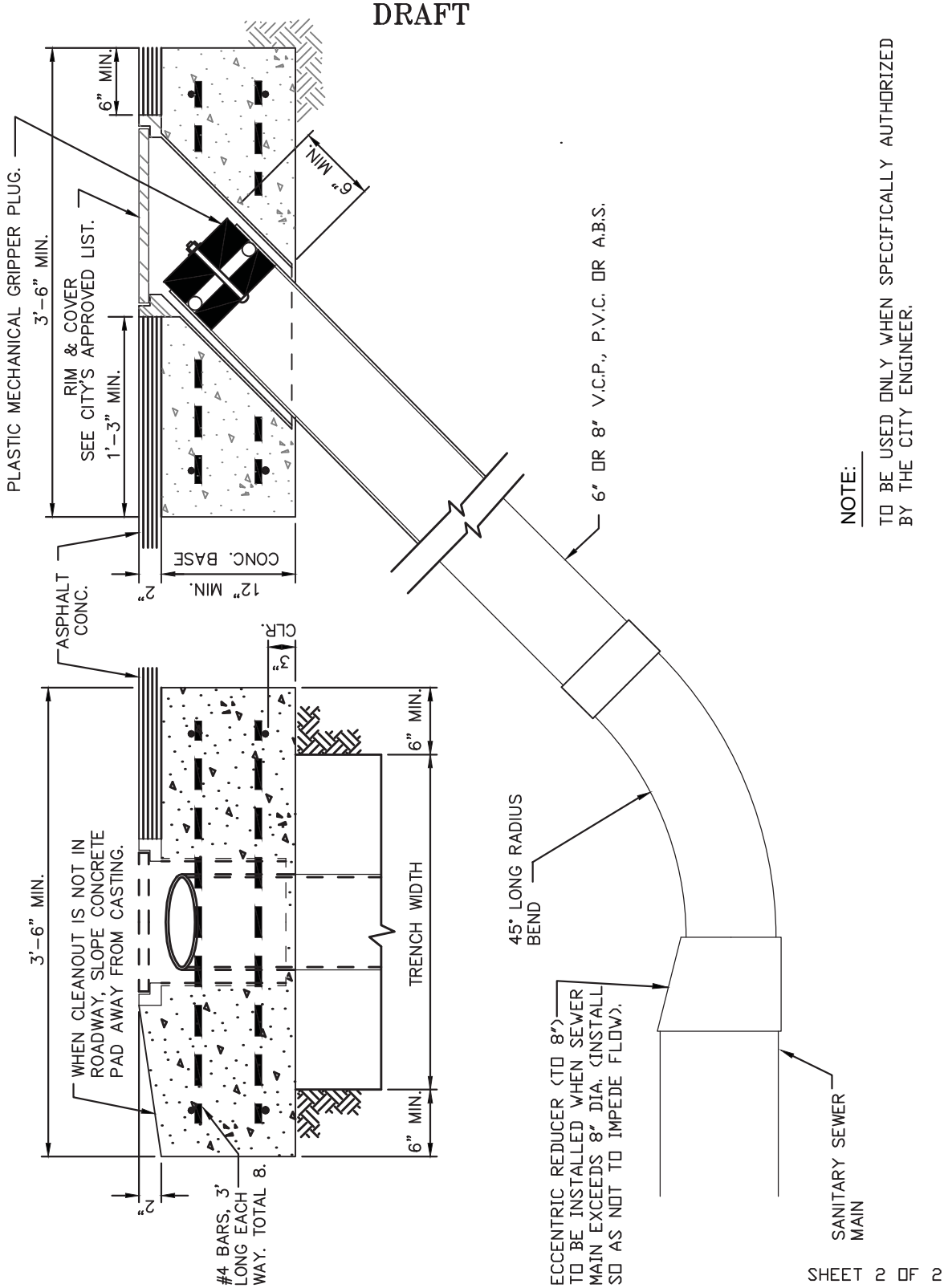

NOTE:
TO BE USED ONLY WHEN SPECIFICALLY AUTHORIZED BY THE CITY ENGINEER.

SHEET 2 OF 2

CITY OF WILLITS	TEMPORARY MAINLINE CLEANOUT			STD. NO. 308
SCALE: NONE	DRAWN: TM	CHK: TM	APPVD: Thomas M Mannatt	DATE: OCT 2009

DRAFT

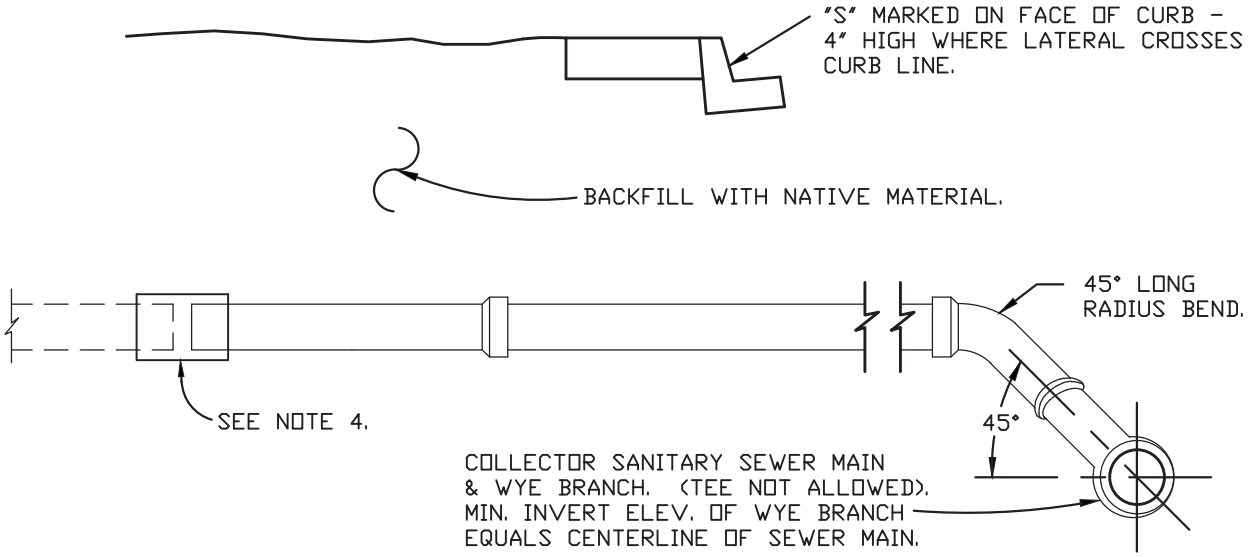

LATERAL CONNECTIONS TO EXISTING MAINS:

PVC, (SDR 35):
4" - 8" : CUT IN WYE
10" & LARGER: GLUE ON SADDLE WITH STRAP TIES.
OR APPROVED BY THE CITY ENGINEER.

LATERAL PIPE MATERIAL TO BE 4" MINIMUM AND ONE OF THE FOLLOWING:

DUCTILE IRON PIPE
POLYVINYL CHLORIDE (PVC) PIPE, SDR 35 WHEN USED WITH A MANUFACTURED "Y" SPECIFICALLY DESIGNED FOR PVC LATERALS. THE "Y" SHALL BE POLYVINYL CHLORIDE (PVC), SDR 35.

NOTES:

1. THE SEWER SERVICE LATERAL SHALL BE OF SUFFICIENT DEPTH TO ADEQUATELY SERVE THE BUILDING SITE, AND IN NO CASE SHALL BE LESS THAN 3 FT. DEEP AT THE BACK OF THE P.U.E. UNLESS OTHERWISE AUTHORIZED BY THE CITY ENGINEER.
2. WHERE PROBLEMS ARE ANTICIPATED IN PROVIDING SEWER SERVICE TO A GIVEN BUILDING SITE, THE LATERAL INVERT AT THE BACK OF THE P.U.E. SHALL BE STAKED BY THE OWNER'S ENGINEER.
3. MINIMUM 2% SLOPE EXCEPT WHERE A VARIATION IS SPECIFICALLY APPROVED BY THE CITY ENGINEER.
4. WHEN CONNECTING TO EXISTING SEWER LATERAL EXTEND TO 1' BEHIND P.U.E.

CITY OF WILLITS	SEWER SERVICE LATERAL				STD. NO. 309
	SCALE: NONE	DRAWN: TM	CHK: TM	APPVD: Thomas M Mannatt	DATE: OCT 2009

DRAFT

NOTE:

WHERE BUILDING SEWERS ARE LOCATED UNDER DRIVEWAYS, CAST IRON OR DUCTILE IRON SEWER PIPE SHALL BE USED.

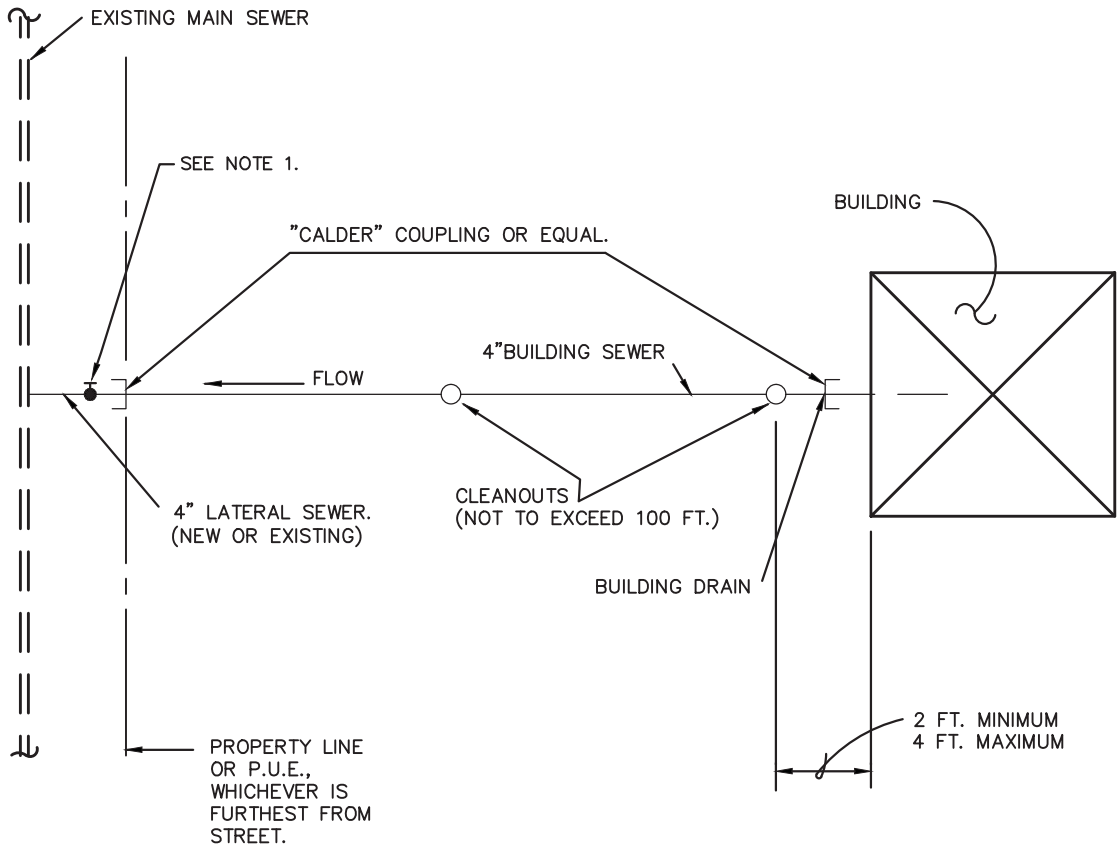

PLAN

NOTES:

1. VALVE SHALL BE INSTALLED ON NON-RESIDENTIAL DEVELOPMENTS AT THE DISCRETION OF THE CITY ENGINEER. VALVES TO BE PER STD 501.

SHEET 1 OF 4

CITY OF WILLITS	TYPICAL SEWER SERVICE CONNECTION DETAILS				STD. NO. 310
	SCALE: NONE	DRAWN: TM	CHK: TM	APPVD: Thomas M Mannelli	DATE: OCT 2009

DRAFT

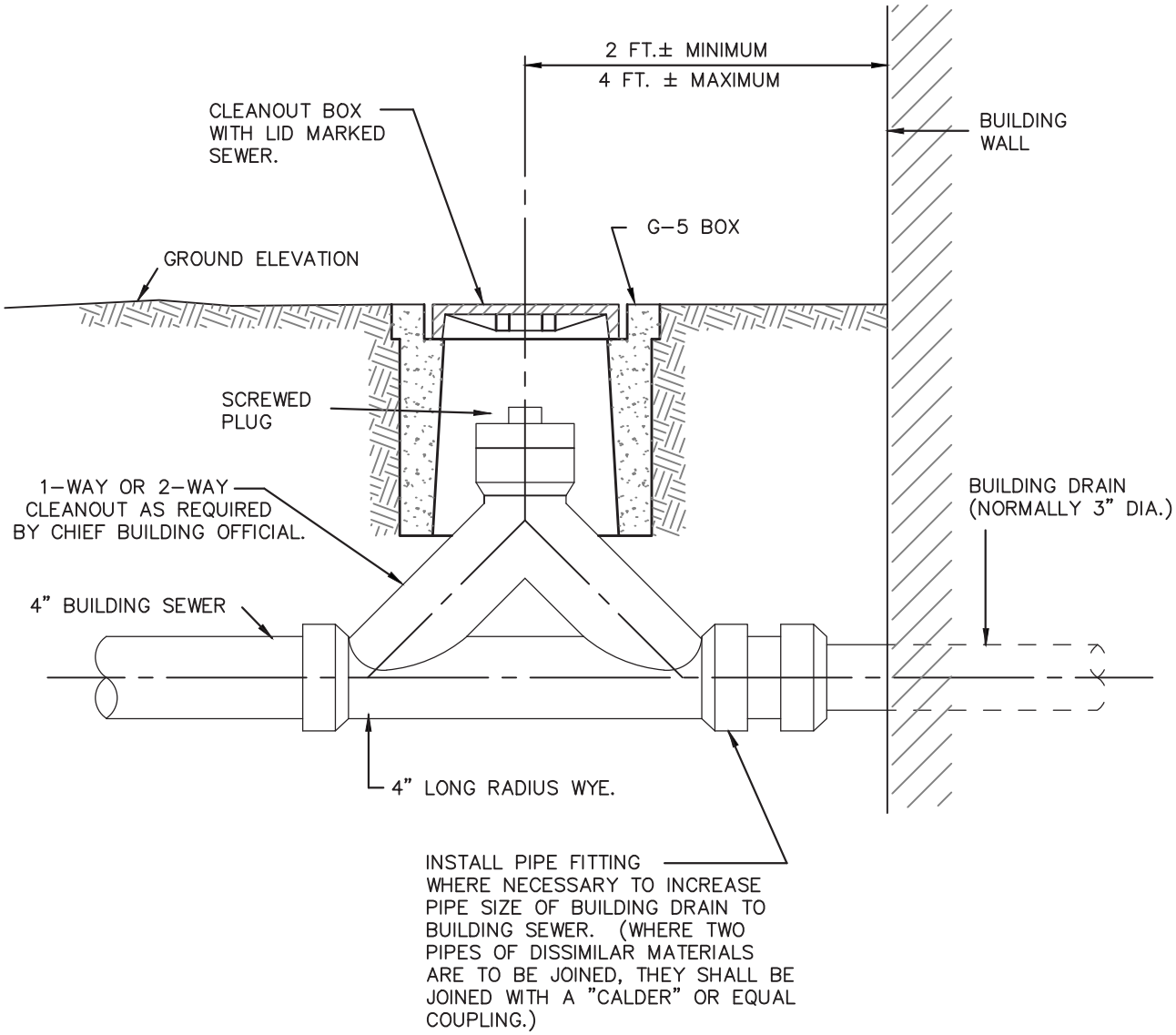

SHEET 2 OF 4

CITY OF WILLITS	CLEANOUT DETAIL AT BUILDING				STD. NO. 310
	SCALE: NONE	DRAWN: TM	CHK: TM	APPVD: Thomas M Mannatt	DATE: OCT 2009

DRAFT

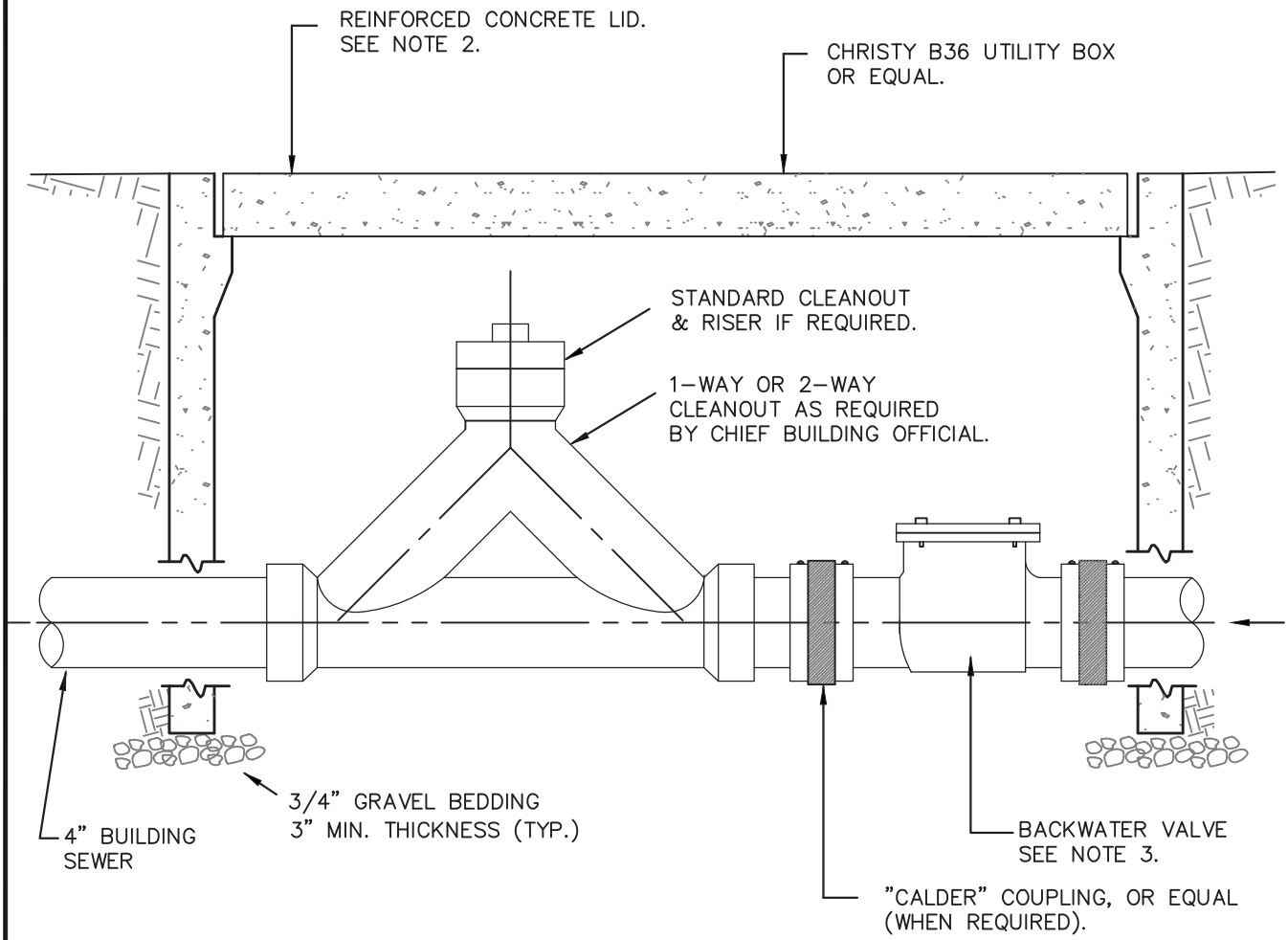

NOTES:

1. THIS INSTALLATION IS REQUIRED WHEREVER THE LOWEST FINISHED FLOOR ELEVATION IS TWELVE (12") INCHES, OR LESS ABOVE THE TOP ELEVATION OF THE NEAREST UPSTREAM MANHOLE OR CLEANOUT.
2. IF THE LID IS SUBJECT TO VEHICULAR TRAFFIC, USE LID DESIGNED FOR H–20 TRAFFIC LOADINGS.
3. BACKWATER VALVE SHALL BE CAST IRON OR CAST BRONZE. VALVE SHALL BE APPROVED BY THE CITY ENGINEER.

SHEET 3 OF 4

CITY OF WILLITS	BACKWATER CHECK VALVE INSTALLATION				STD. NO. 310
	SCALE: NONE	DRAWN: TM	CHK: TM	APPVD: Thomas M Mannatt	DATE: OCT 2009

DRAFT

NOTES:

PIPE BEDDING AND TRENCH BACKFILL MATERIAL SHALL BE A WELL GRADED MATERIAL AND SHALL HAVE A MINIMUM SAND EQUIVALENT VALUE OF 30 AND SHALL CONFORM TO THE FOLLOWING GRADINGS:

	PERCENT PASSING					
	3"	3/4"	3/8"	NO.4	NO.16	NO.200
PIPE BEDDING		100	80–100	10–50	5–30	0–4
TRENCH BACKFILL	NATIVE MATERIAL MAY BE USED					

IN ADDITION, WHEN TESTED WITH THE FOLLOWING SERIES OF SIEVES, NO MORE THAN 25% OF THE MATERIAL WILL BE RETAINED BETWEEN ANY ADJACENT SIEVES: 3", 2–1/2", 2", 1–1/2", 1", 3/4", 1/2", 3/8", NO. 4, NO. 8, NO. 16, NO. 30, NO. 50, NO. 100, AND NO. 200.

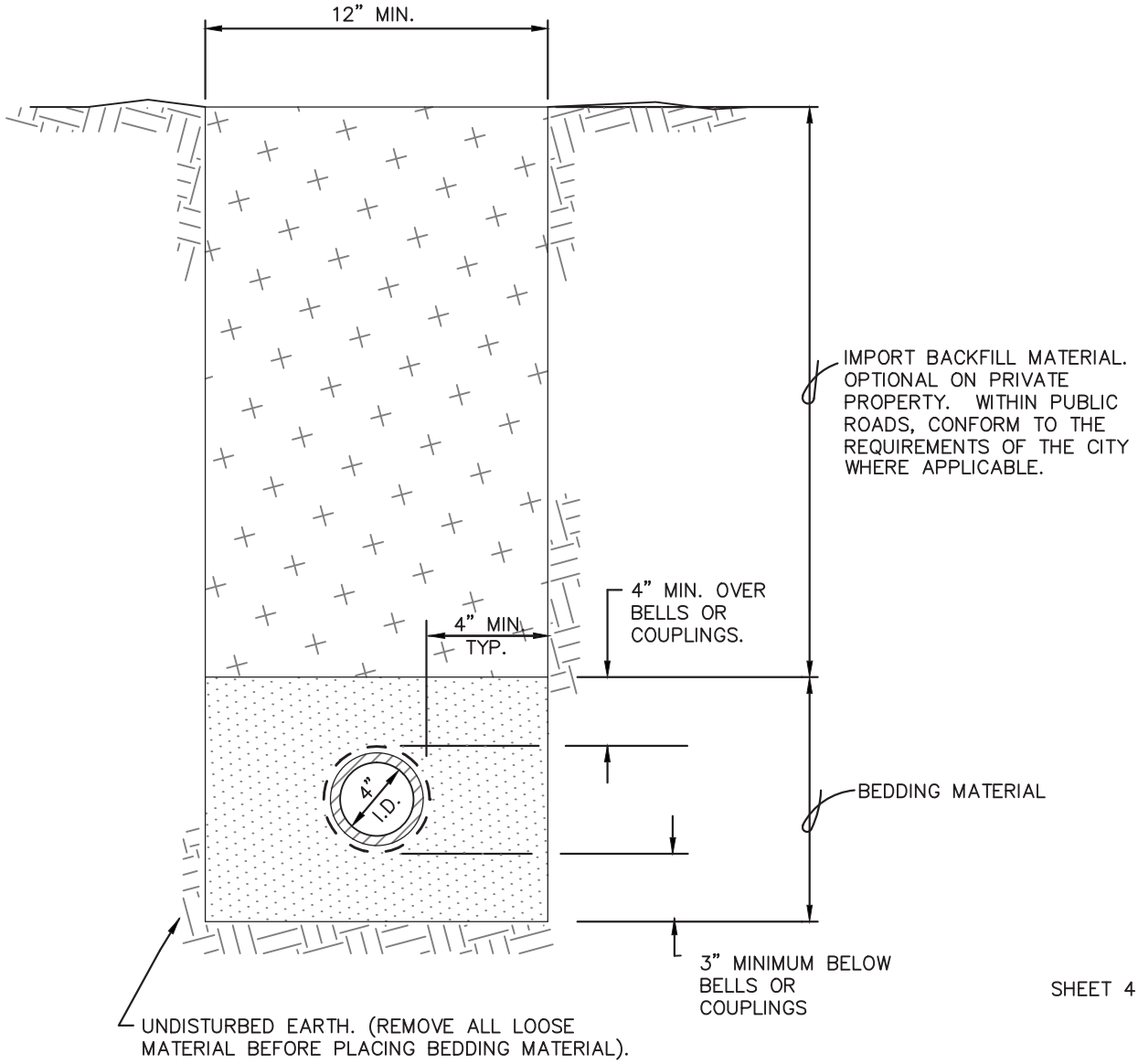

SHEET 4 OF 4

CITY OF WILLITS	SEWER SERVICE TRENCH DETAIL			STD. NO. 310
SCALE: NONE	DRAWN: TM	CHK: TM	APPVD: Thomas M Morrell	DATE: OCT 2009

DRAFT

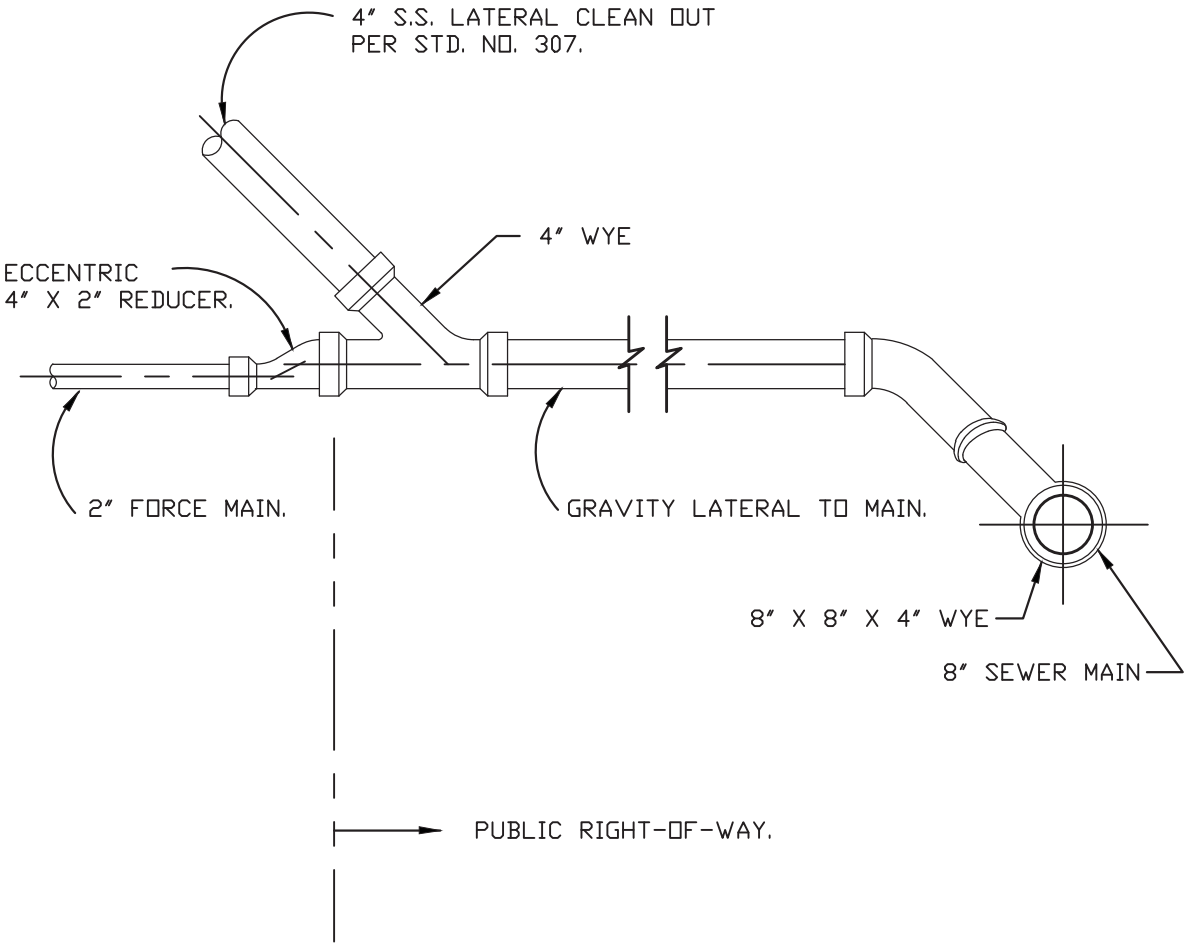

NOTES:

1. MUST BE USED FOR ALL PRIVATE SEWAGE LIFT STATION DISCHARGES. NO DISCHARGES MAY BE MADE DIRECTLY TO THE COLLECTOR SEWER, TRUNK SEWER, OR MANHOLE.
2. ANY ALTERNATE DESIGN MUST BE APPROVED BY THE CITY ENGINEER.
3. CONSTRUCTION DETAILS, SLOPE, AND MATERIALS CONFORM TO STD. NO. 309.

CITY OF WILLITS	DISCHARGE FOR PRIVATE MAIN				STD. NO. 311
	SCALE: NONE	DRAWN: TM	CHK: TM	APPVD: Thomas M Mannatt	DATE: OCT 2009

DRAFT

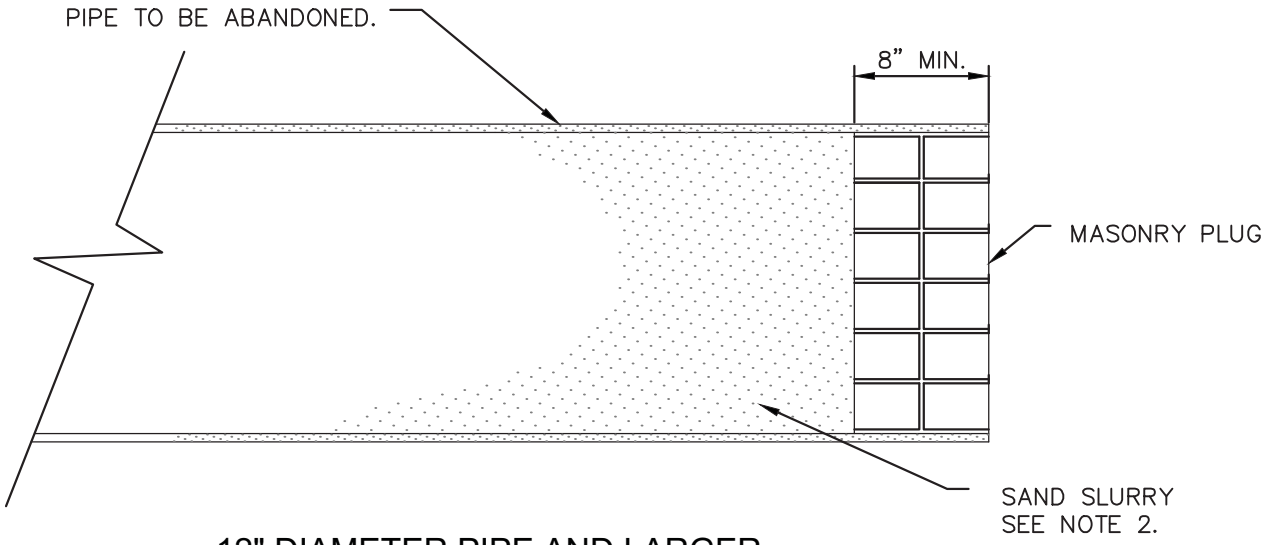

12" DIAMETER PIPE AND LARGER

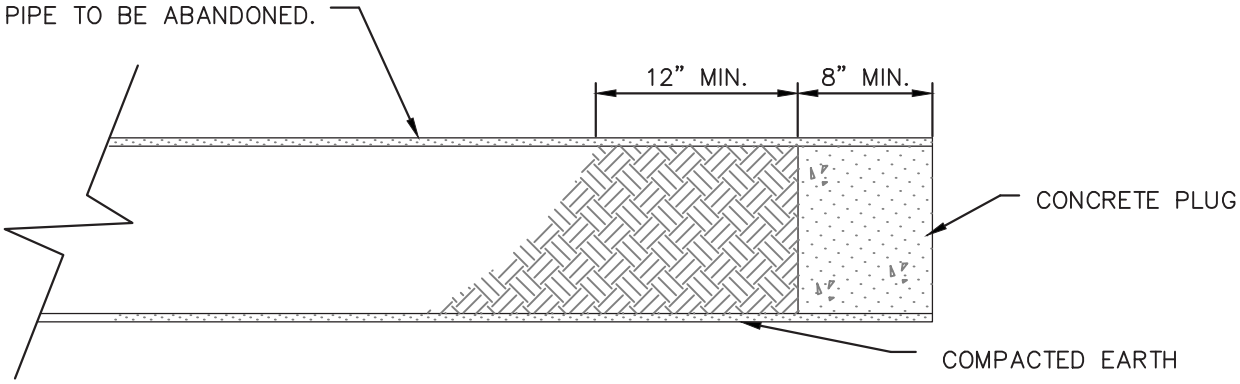

10" DIAMETER PIPE AND SMALLER

NOTES:

1. PIPE PLUGS SHALL BE INSTALLED TO THE SATISFACTION OF THE CITY ENGINEER.
2. ABANDONED PIPES, 12" AND LARGER, SHALL BE BROKEN INTO EVERY 50' AND SHALL BE FILLED COMPLETELY WITH SAND SLURRY.

CITY OF WILLITS	ABANDONED PIPE PLUG DETAIL				STD. NO. 312
	SCALE: NONE	DRAWN: TM	CHK: TM	APPVD: Thomas M Monnett	DATE: OCT 2009

DRAFT

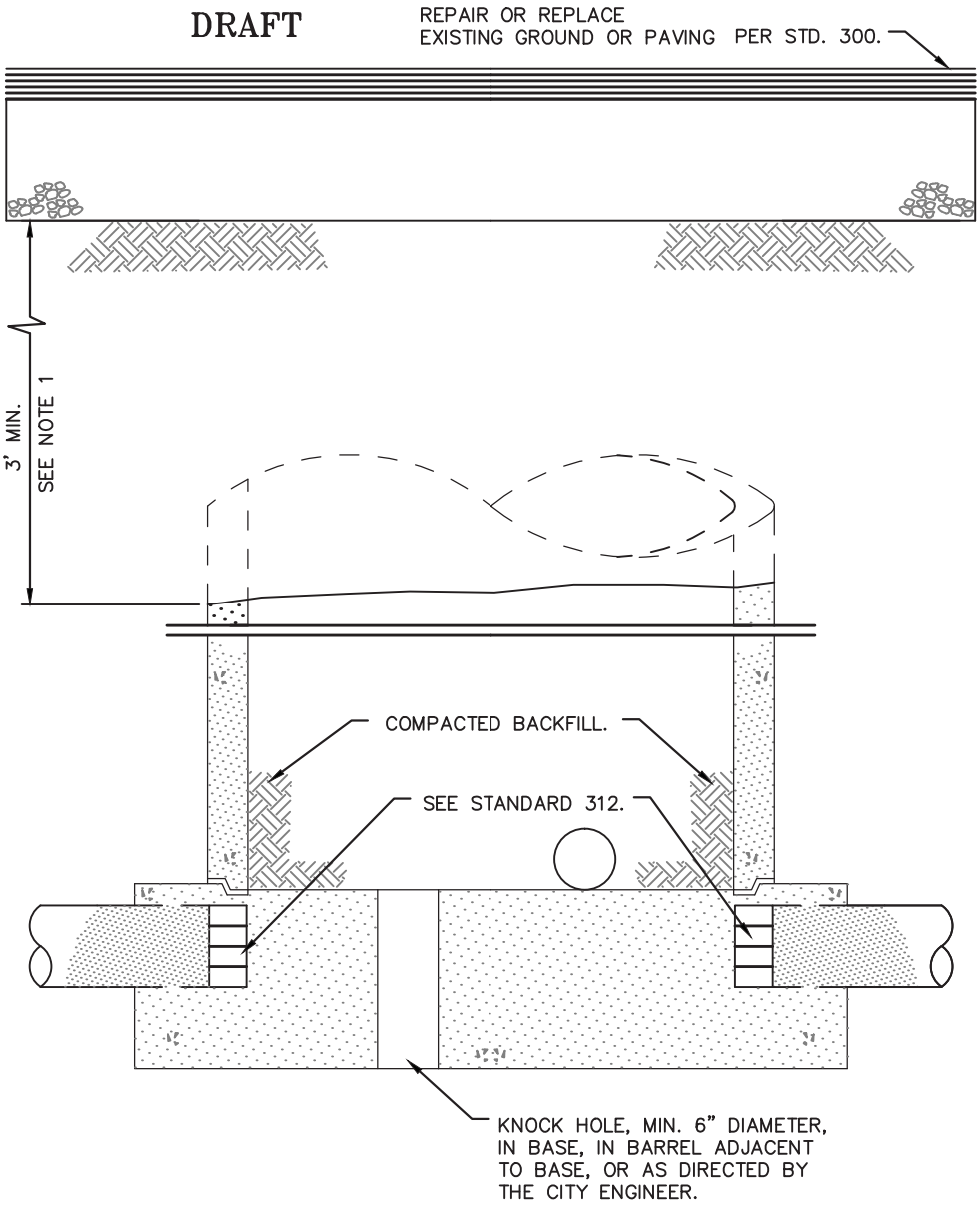

NOTES:

1. REMOVE FRAME, COVER, TAPER AND BARREL SECTIONS.
2. AFTER PLUGGING ALL PIPES IN MANHOLE, THE REMAINING PORTION OF THE BARREL SECTION AND ALL VOIDS CREATED BY THE REMOVAL OF THE UPPER PORTIONS OF THE MANHOLE, SHALL BE BACKFILLED AND COMPACTED TO 90% RELATIVE DENSITY. USE TRENCH BACKFILL OR PIPE BEDDING MATERIAL.

CITY OF WILLITS	ABANDONED MANHOLE DETAIL				STD. NO. 313
	SCALE: NONE	DRAWN: TM	CHK: TM	APPVD: Thomas M Mannatt	DATE: OCT 2009

DRAFT

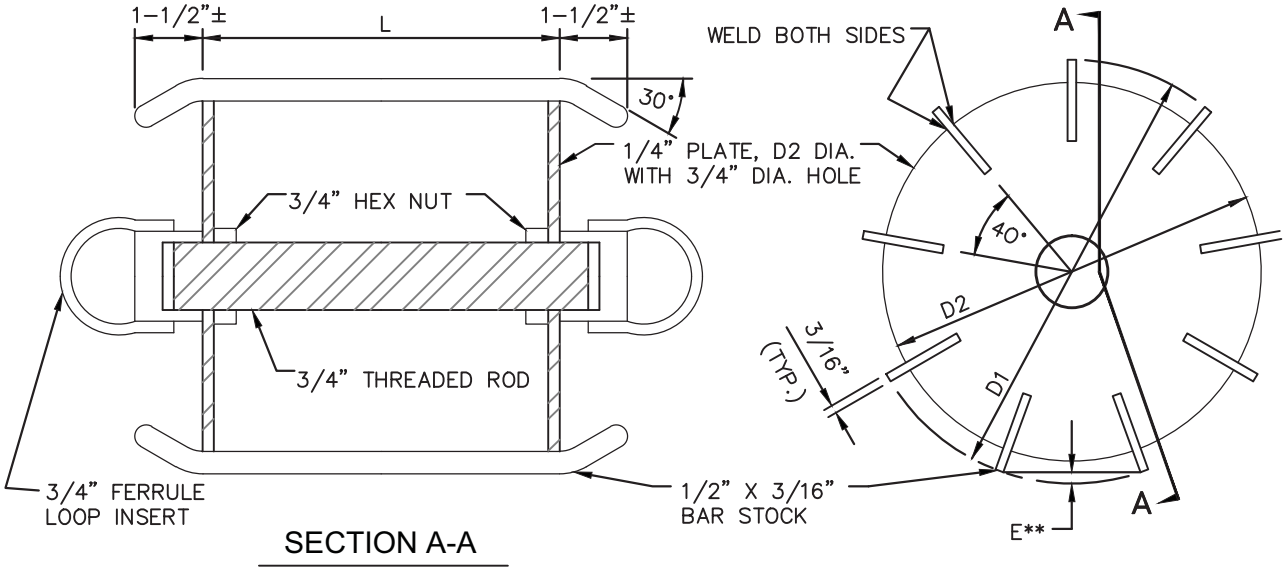

		4% DEFLECTION		5% DEFLECTION			
		PVC ASTM D 2680		ABS ASTM D 2751 PVC ASTM D 3034		ASTM D 2680	
		COMPOSITE (I)		SDR35		COMPOSITE (I)	
NOM. DIA.	L	D(2)	R(3)	D(2)	D(3)	D(2)	R(3)
6"	6"	5.544	4.544	5.629	4.629	5.492	4.492
8"	8"	7.473	6.473	7.537	6.537	7.402	6.402
10"	10"	9.401	8.401	9.421	8.421	9.312	8.312
12"	12"	11.330	10.330	11.210	10.210	11.223	10.223
15"	15"	14.222	13.222	13.729	12.729	14.088	13.088

1. TRUSS PIPE – ABS OR PVC.
2. GAGE DIAMETER HAS BEEN CALCULATED TO CORRECT CHORD LENGTH ERROR "E".
3. MINIMUM PLATE DIAMETER.
4. A PROVING RING OF THE SPECIFIED DIAMETER (D) SHALL BE SUPPLIED WITH EACH DEFLECTION GAGE.

NOTES:

1. MARK ALL GAGES WITH ASTM SPECIFICATION NUMBER, SDR NUMBER AND DEFLECTION.
2. THE 1/2" BAR STOCK ON EDGE PROVIDES CLEARANCE TO PASS SMALL AMOUNTS OF SOIL WHICH MAY BE IN PIPE.

CITY OF WILLITS

PLASTIC SEWER PIPE DEFLECTION GAGE

STD. NO. 314

SCALE: NONE | DRAWN: TM | CHK: TM | APPVD: Thomas M Mannell | DATE: OCT 2009

DRAFT

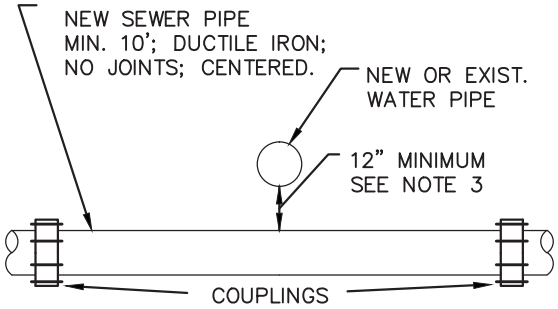

NEW SEWER UNDER
NEW OR EXISTING WATER

CASE 1

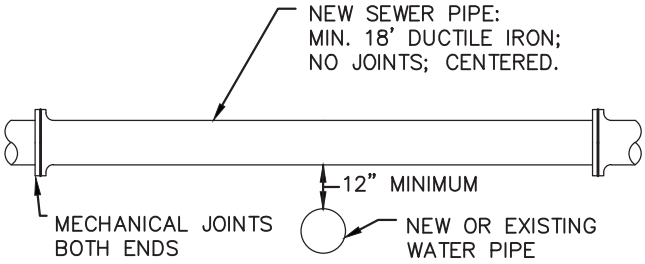

NEW SEWER OVER
NEW OR EXISTING WATER

CASE 2

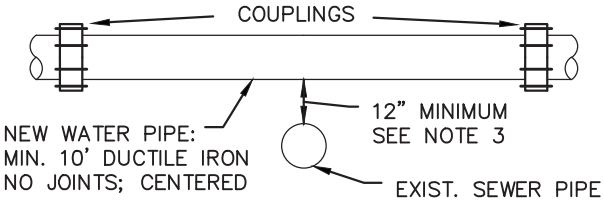

NEW WATER OVER
EXISTING SEWER

CASE 3

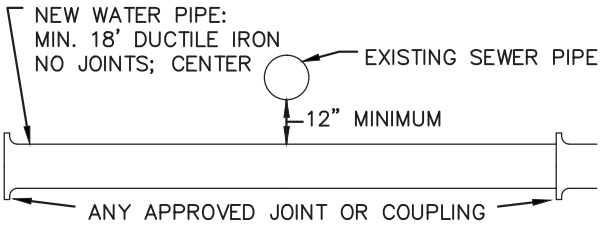

NEW WATER UNDER
EXISTING SEWER

CASE 4

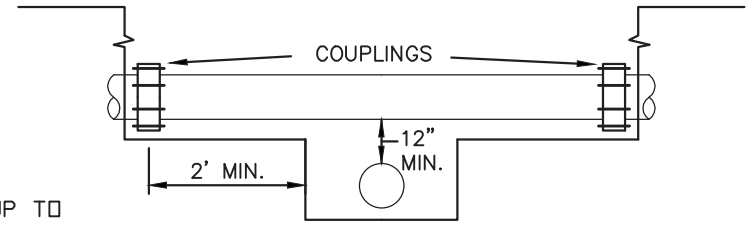

NEW PIPE UNDER EXISTING

CASE 5 – SEE NOTE 4

NOTES:

1. THIS STANDARD APPLIES TO PIPES UP TO AND INCLUDING 16" DIAMETER. ALL CROSSINGS OF LARGER DIAMETER SHALL BE AS APPROVED BY THE CITY ENGINEER.
2. ALL NEW DUCTILE IRON SHALL BE WRAPPED IN POLYETHYLENE PER CITY CONSTRUCTION SPECIFICATIONS.
3. WHERE SEWER CROSSES BELOW A WATER MAIN, WITH 1' OR MORE VERTICAL CLEARANCE, NO SPECIAL INSTALLATION IS REQUIRED.
4. NEW PIPE UNDER EXISTING -'CASE 5' SHALL BE USED WHEN THE EXISTING PIPE HAS A JOINT OVER OR WITHIN 2' OF THE NEW TRENCH.
5. ANY PIPE-PIPE CROSSING WITH LESS THAN 6" VERTICAL CLEARANCE SHALL NOT BE INSTALLED WITHOUT APPROVAL OF THE CITY ENGINEER.
6. FOR WATER MAIN LOWERING DETAIL, SEE CITY STANDARD 528.
7. SEE CITY'S APPROVED LIST FOR APPROVED COUPLINGS.

CITY OF WILLITS	PIPE– PIPE CROSSING DETAILS				STD. NO. 315
	SCALE: NONE	DRAWN: TM	CHK: TM	APPVD: Thomas M Marrett	DATE: OCT 2009

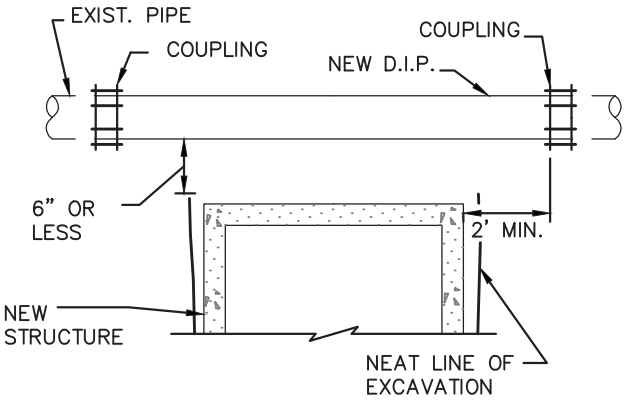

NEW STRUCTURE UNDER EXISTING

TYPE C

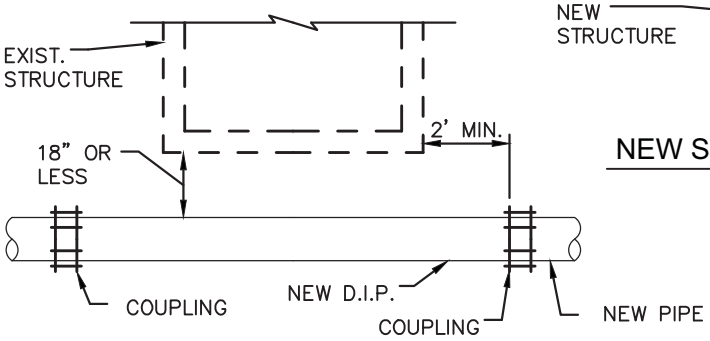

NEW PIPE UNDER EXISTING

TYPE A

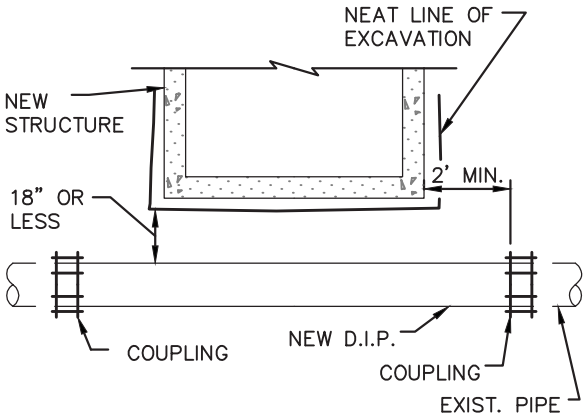

NEW STRUCTURE OVER EXISTING

TYPE B

NOTES:

1. THIS STD. APPLIES TO PIPES UP TO AND INCLUDING 16" DIAMETER. ALL CROSSINGS INVOLVING PIPES OF LARGER DIAMETER SHALL BE AS APPROVED BY THE CITY ENGINEER.
2. WHEN PIPES CROSS WITHIN THE DIMENSIONS SHOWN, A NEW DUCTILE IRON PIPE SECTION SHALL BE INSTALLED AS DETAILED.
3. ALL DUCTILE IRON PIPE SHALL BE ENCASED IN POLYETHYLENE FILM IN TUBE FORM.
4. ANY TYPE "A" INSTALLATION REQUIRING MORE THAN ONE LENGTH OF PIPE SHALL BE ENCASED PER STD. 527.
5. SEE CITY APPROVED LIST FOR APPROVED COUPLINGS.

CITY OF WILLITS	PIPE– STRUCTURE CROSSING DETAILS				STD. NO. 316
	SCALE: NONE	DRAWN: TM	CHK: TM	APPVD: Thomas M Mannatt	DATE: OCT 2009

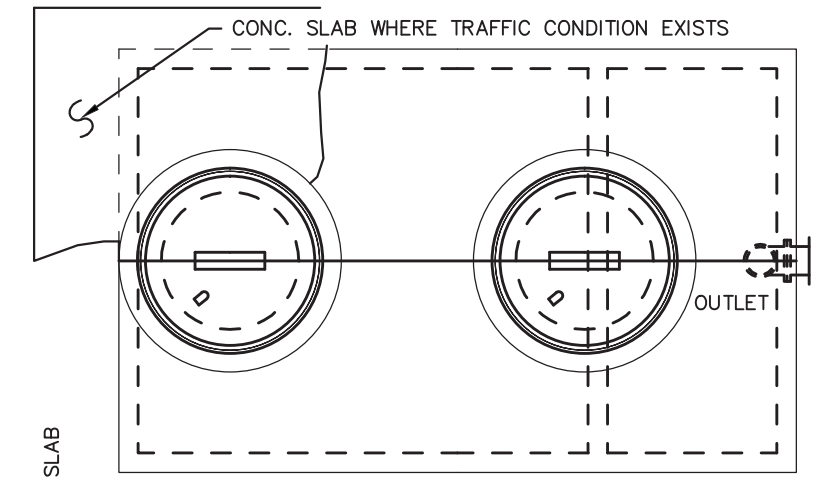

PLAN

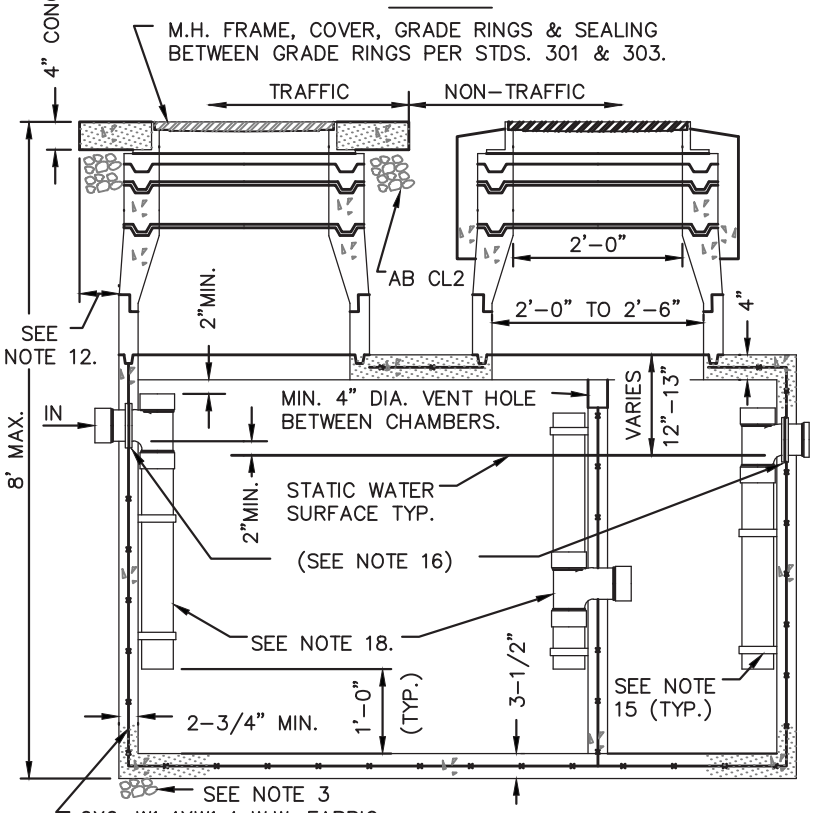

SECTION

NOTES:

1. TANK TO BE PRECAST AS MANUFACTURED BY:
   M.C. NOTTINGHAM
   PACIFIC CONC. PRODUCTS
   SELVAGE CONC. PRODUCTS
   OR CITY APPROVED EQUAL.
2. POLYETHYLENE TANKS ACCEPTABLE IN NON-TRAFFIC AREAS UPON SPECIFIC APPROVAL OF THE CITY ENGINEER.
3. 3" MIN. BEDDING MAT'L PER CITY STD. 300.
4. ALL SURFACE WATER MUST DRAIN AWAY FROM MANHOLES.
5. PIPE SHALL BE 6" MAX. DIAMETER PER U.P.C.
6. CONCRETE MIN. COMPRESSIVE STRLENGTH OF 3000 PSI AT 28 DAYS.
7. ALL WYES SHALL BE ONE-WAY CLEANOUT WYES EXCEPT AS NOTED. TYPE PER U.P.C.
8. GREASE INTERCEPTORS SHALL BE LOCATED OUTSIDE OF BUILDINGS IN A LOCATION ACCESSIBLE TO WASTE HAULER PUMPER.
9. ALL GREASE INTERCEPTORS SHALL BE LOCATED OUTSIDE PUBLIC RIGHT-OF-WAY.
10. EXCAVATIONS SHALL BE NEAT LINE TYPICALLY ALL SIDES.
11. INTERCEPTOR TO BE USED IN CONJUNCTION WITH "SAMPLING MANHOLE" PER STD. 319.
12. SLAB TO EXTEND MIN. 24" BEYOND ALL SIDES OF TANK. (TRAFFIC AREA)
13. ALL WASTE MUST ENTER THROUGH INLET FITTING ONLY.
14. TANK TO BE STENCILED ON UPPER LEFT HAND CORNER OF INLET END IN WHITE.
15. STAINLESS STEEL CLAMP & BOLTS 3'-0" O.C. MAX. (TYP.) MIN. 2 REQ'D.
16. A WATER STOP CONSISTING OF A STD. MANHOLE ADAPTER GASKET AS SUPPLIED BY THE PIPE MANUFACTURER SHALL BE GROUTED INTO THE INTERCEPTOR WALL NEAR THE CENTER OF THE WALL.

NOTES: (CONT.)

17. TANK CAPACITY TO BE DETERMINED AT THE TIME OF INDUSTRIAL WASTE PERMIT APPLICATION. SEE ENGINEERS APPROVED LIST.
18. PIPE & FITTINGS TO BE 4" SCH. 40 PVC.
19. REINFORCING BARS INTERMEDIATE GRADE ASTM A615-62T & A305-56T. REINFORCING WIRE FABRIC - ASTM A185-61T.
20. ALTERNATE DESIGN BY A REGISTERED ENGINEER MAY BE SUBSTITUTED FOR REVIEW BY THE CITY.

CITY OF WILLITS	PRECAST GREASE INTERCEPTOR			STD. NO. 317
SCALE: NONE	DRAWN: TM	CHK: TM	APPVD: Thomas M Mannell	DATE: OCT 2009

DRAFT

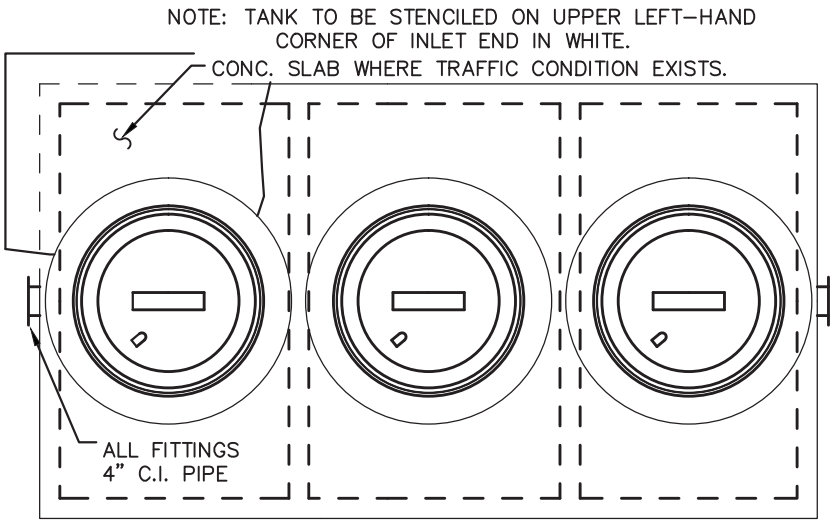

PLAN

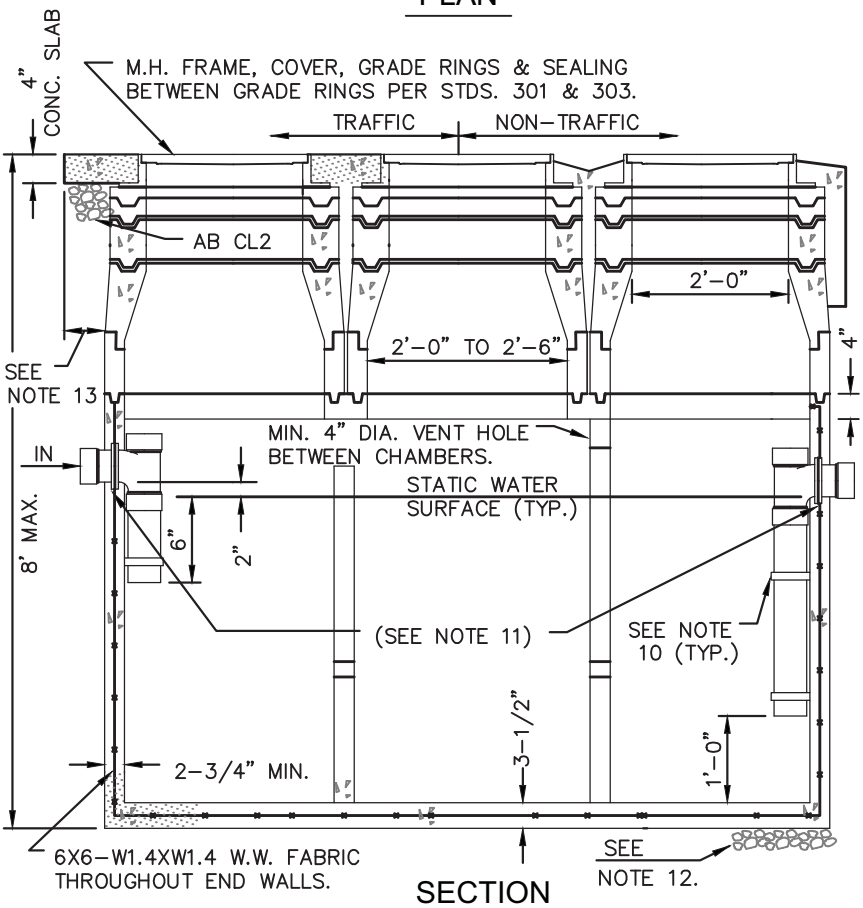

SECTION

NOTES:

1. TANK TO BE PRECAST AS MANUFACTURED BY:
   M.C. NOTTINGHAM
   PACIFIC CONC. PRODUCTS
   SELVAGE CONC. PRODUCTS
   OR CITY APPROVED EQUAL.
2. ALL GREASE INTERCEPTORS SHALL BE LOCATED OUTSIDE PUBLIC R/W
3. GREASE INTERCEPTORS SHALL BE LOCATED OUTSIDE OF BUILDINGS IN A LOCATION ACCESSIBLE TO WASTE HAULER PUMPER.
4. ALTERNATE DESIGN BY A REGISTERED ENGINEER MAY BE SUBSTITUTED FOR REVIEW BY THE CITY.
5. PIPE SHALL BE 6" MAX. DIAMETER PER U.P.C.
6. EXCAVATIONS SHALL BE NEAT LINE TYPICALLY ALL SIDES.
7. HEIGHT OF TANK ABOVE FITTINGS VARIABLE. ONE FT. SECTIONS MAY BE ADDED TO REQUIRED F.G.
8. ALL WYES SHALL BE ONE-WAY CLEANOUT WYES EXCEPT AS NOTED. TYPE PER U.P.C.
9. INTERCEPTOR TO BE USED IN CONJUNCTION WITH "SAMPLING MANHOLE" PER STD. 319.
10. STAINLESS STEEL CLAMP & BOLTS 3'-0" O.C. MAX. (TYP.) MIN. 2 REQ'D.
11. A WATER STOP CONSISTING OF A STD. MANHOLE ADAPTER GASKET AS SUPPLIED BY THE PIPE MANUFACTURER SHALL BE GROUTED INTO THE INTERCEPTOR WALL NEAR THE CENTER OF THE WALL.
12. 3" MIN. BEDDING MAT'L PER CITY STD. 300.
13. SLAB TO EXTEND MIN. 24" BEYOND ALL SIDES OF TANK.(TRAFFIC AREA)
14. TANK CAPACITY TO BE DETERMINED AT THE TIME OF INDUSTRIAL WASTE PERMIT APPLICATION.
15. PIPE & FITTINGS TO BE 4" SCH.. 40 PVC.
16. CONCRETE MIN. COMPRESSIVE STRENGTH OF 3000 PSI AT 28 DAYS.
17. ALL WASTE MUST ENTER THROUGH INLET FITTING.

NOTES: (CONT.)

18. REINFORCING BAR INTERMEDIATE GRADE ASTM A615-62T & A305-56T.
19. REINFORCING WIRE FABRIC- ASTM A185-61T.

CITY OF WILLITS	SAND AND GREASE INTERCEPTOR				STD. NO. 318
	SCALE: NONE	DRAWN: TM	CHK: TM	APPVD: Thomas M Monnatt	DATE: OCT 2009

DRAFT

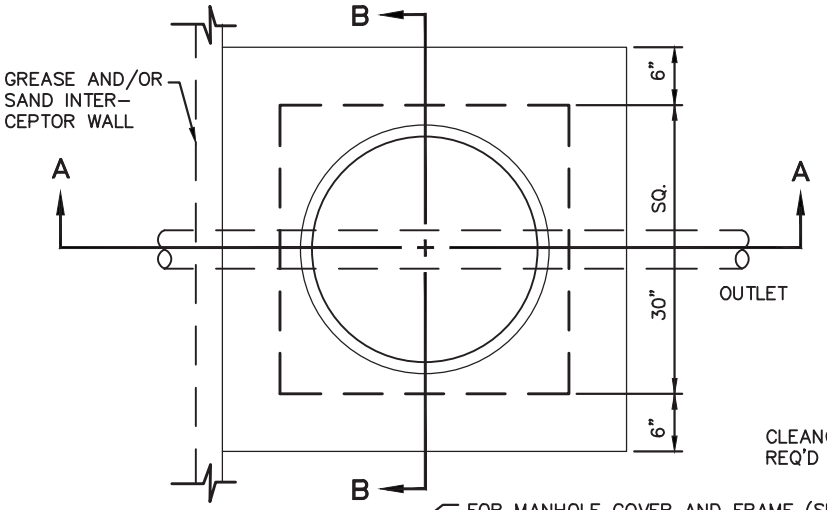

PLAN

NO SCALE

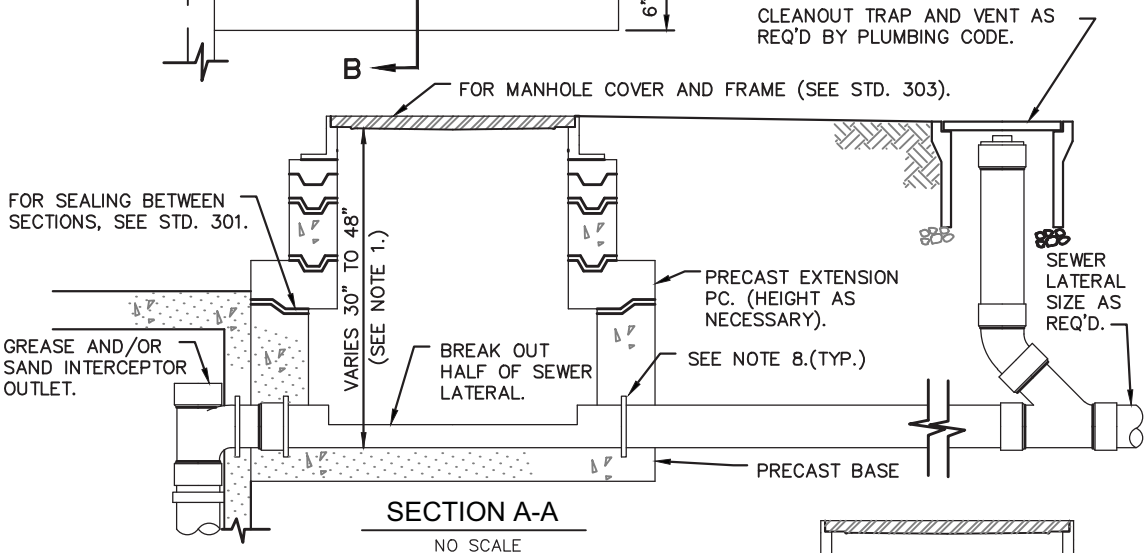

SECTION A-A

NO SCALE

NOTES:

1. IF LESS THAN 30" REVIEW WITH CITY FOR ADD'L VAULT REQ'MTS. IF GREATER THAN 48" INSTALL SAMPLING M.H. SIM. TO STD. 301 WITH FLOW-THROUGH CUT-AWAY PIPE AS PER THIS STD.
2. SAMPLING M.H. TO BE LOCATED OUTSIDE OF PUBLIC RIGHT-OF-WAY EXCEPT WITH WRITTEN APPROVAL OF THE PUBLIC WORKS ENCROACHMENT OFFICER.
3. AN ALTERNATE DESIGN BY A REGISTERED ENGINEER MAY BE SUBMITTED FOR REVIEW BY THE CITY.
4. LOCATION SUBJECT TO THE APPROVAL OF THE CITY ENGINEER.
5. MANHOLE SHALL BE SANTA ROSA CAST PRODUCTS PRECAST CONC. DROP INLET BOX #5K WITH #5K X 24" DIAMETER TRANSITION SLAB.
6. ALL SURFACE WATER MUST DRAIN AWAY FROM SAMPLING M.H.
7. SAMPLING M.H. TO BE USED IN CONJUNCTION WITH EITHER STDS.
8. A WATER STOP CONSISTING OF A STD. MANHOLE ADAPTER GASKET AS SUPPLIED BY THE PIPE MFR. TO BE GROUTED INTO THE BOX WALL NEAR THE CENTER OF THE WALL.

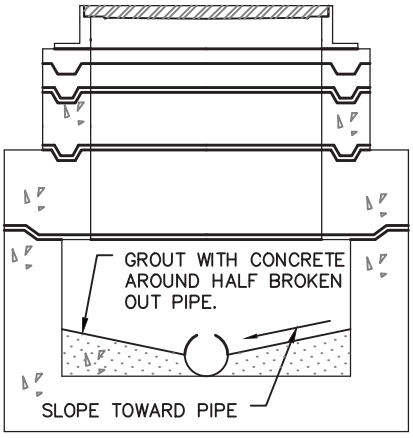

SECTION B-B

NO SCALE

CITY OF WILLITS	SAMPLING MANHOLE EXTERIOR USE			STD. NO. 319
SCALE: NONE	DRAWN: TM	CHK: TM	APPVD: Thomas M Mannatt	DATE: OCT 2009

DRAFT

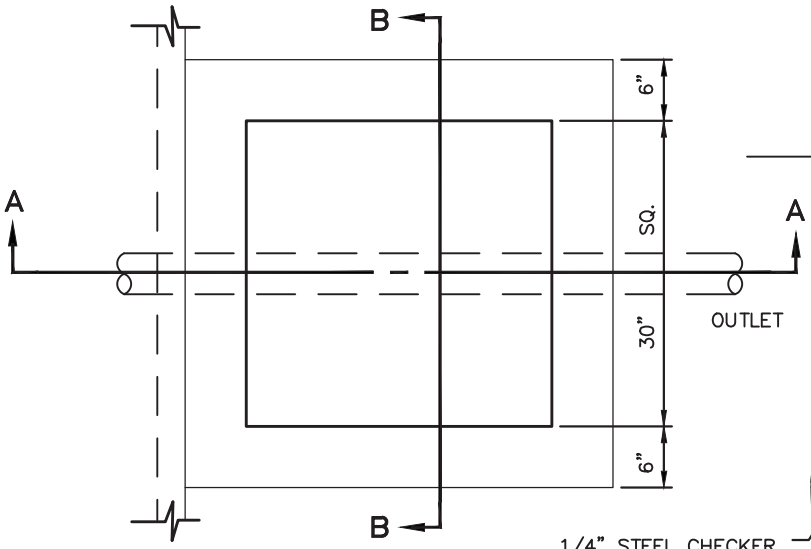

PLAN

NO SCALE

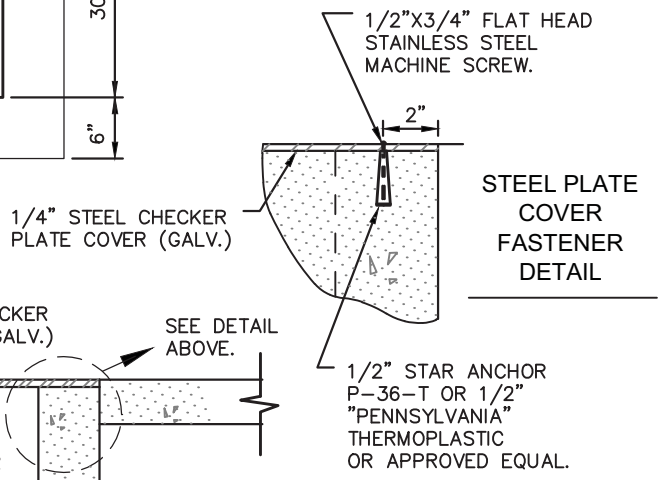

STEEL PLATE COVER FASTENER DETAIL

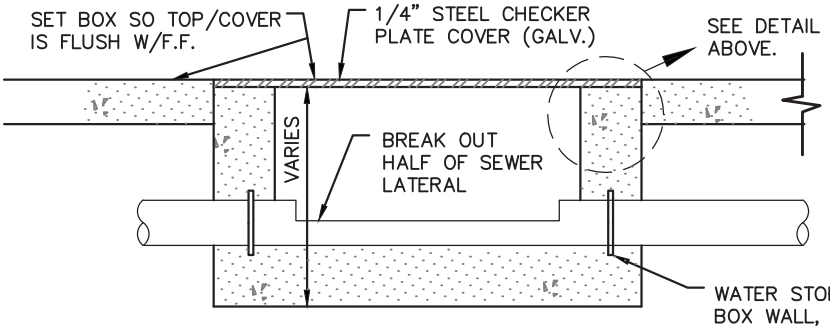

SECTION A - A

NO SCALE

NOTES:

1. TO BE USED IN THE INTERIOR OF BUILDINGS IN CONJUNCTION W/SAMPLING MANHOLE AND TO BE UPSTREAM OF THE SAMPLING MANHOLE.
2. LOCATION SUBJECT TO THE APPROVAL OF THE CITY ENGINEER.
3. TO BE USED ONLY WITH THE APPROVAL OF THE CITY ENGINEER.
4. ALTERNATE DESIGN BY A REGISTERED ENGINEER MAY BE SUBMITTED FOR REVIEW BY THE CITY.
5. BOX SHALL BE SANTA ROSA CAST PRODUCTS MODEL 5K OR APPROVED EQUAL.
6. ALL SURFACE WATER MUST DRAIN AWAY FROM SAMPLING BOX.
7. SAMPLING BOX TO BE USED IN CONJUNCTION WITH EITHER STDS. 317 OR 318.
8. A WATER STOP CONSISTING OF A STANDARD MANHOLE ADAPTER GASKET AS SUPPLIED BY THE PIPE MANUFACTURER SHALL BE GROUTED INTO THE BOX WALL NEAR THE CENTER OF THE WALL.

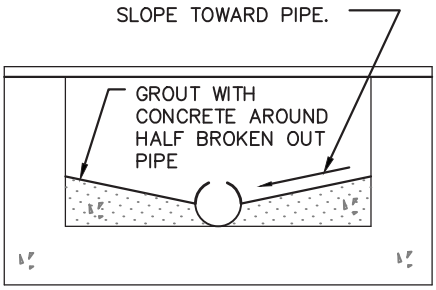

SECTION B - B

NO SCALE

CITY OF WILLITS	SAMPLING BOX BUILDING INTERIOR			STD. NO. 320
SCALE: NONE	DRAWN: TM	CHK: TM	APPVD: Thomas M Mannatt	DATE: OCT 2009

City of Willits

Overflow Emergency Response Plan

Effective Date: _____

Revised Date: _____

Approved by: _____

Signature: _____

Date: _____

Prepared by David Patzer, DKF Solutions Group
(707) 373-9709 dpatzer@dkfsolutions.com

Copyright © 2004-2014 DKF Solutions Group, LLC. All rights reserved.

Table of Contents

Sanitary Sewer Overflow Emergency Response Plan (OERP)

(ref. SWRCB Order No. 2006-0003-DWQ Element VI)

1. Purpose
2. Policy
3. Definitions as used in this OERP
4. Regulatory Requirements for OERP Element of SSMP
5. Goals
6. Sanitary Sewer Overflow (SSO) Detection and Notification
7. SSO Response Procedures
8. Recovery and Cleanup
9. Water Quality
10. Sewer Backup Into/Onto Private Property Claims Handling Policy
11. Notification, Reporting, Monitoring and Recordkeeping Requirements
12. Post SSO Event Debriefing
13. Failure Analysis Investigation
14. SSO Response Training
15. Authority
16. References

Appendix A: Regulatory Notifications Packet

Instructions ..... Packet Envelope
Regulatory Reporting Guide **A**-1
Category 1 SSO Reporting Checklist ..... -2a
Category 2 and 3 SSO Reporting Checklist ..... -2b

Appendix B: Sanitary Sewer Backup Packet

Response Instructions ..... Packet Envelope
Response Flowchart **B**-1
Bubbled Toilets Letter ..... -2
First Responder Form ..... -3
Declination of Cleaning Services ..... -4
Lodging Authorization Form ..... -5
Sewer Overflow Report ..... -6
Start Time Determination Form ..... -7
Volume Estimation Methods
- Eyeball Estimation ..... -8a
- Duration and Flow Rate Photo Comparison ..... -8b
- Upstream Lateral Connections ..... -8c

Lateral TV Report ..... -9
Claims Submittal Checklist ..... -10
Collection System Failure Analysis Form ..... -11
Customer Service Packet
- Instructions ..... envelope
- Customer Information CS-1
- Sewer Spill Reference Guide ..... pamphlet

Regulatory Notifications Packet ..... See contents list above
Door Hanger ..... n/a

© 2004-2014 DKF Solutions Group, LLC. All rights reserved.

Table of Contents

Appendix C: Sanitary Sewer Overflow Packet

Instructions and Chain of Custody ..... Packet Envelope
Responding to a Sanitary Sewer Overflow **C**-1
Sewer Overflow Report ..... -2
Start Time Determination Form ..... -3
Volume Estimation Methods
Eyeball Estimation ..... -4a
Duration and Flow Rate Photo Comparison ..... -4b
Upstream Lateral Connections ..... -4c
Collection System Failure Analysis Form ..... -5
Regulatory Notifications Packet ..... See contents list above
Sewer Spill Reference Guide ..... pamphlet
Public Posting ..... n/a
Door Hanger ..... n/a

Appendix D: Field Sampling Kit

Procedures for Sampling Receiving Waters and Posting
Warnings after a Sewage Spill **D**-1
Sample Collection Chain of Custody Record ..... -2

Appendix E: Contractor Orientation

© 2004-2014 DKF Solutions Group, LLC. All rights reserved.

Sanitary Sewer Overflow Emergency Response Plan

(ref. SWRCB Order No. 2006-0003-DWQ Element VI)

1. Purpose

The purpose of the City of Willits's Overflow Emergency Response Plan (OERP) is to support an orderly and effective response to Sanitary Sewer Overflows (SSOs). The OERP provides guidelines for City personnel to follow in responding to, cleaning up, and reporting SSOs that may occur within the City's service area. This OERP satisfies the SWRCB Statewide General Waste Discharge Requirements (GWDR), which require wastewater collection agencies to have an Overflow Emergency Response Plan.

2. Policy

The City's employees are required to report all wastewater overflows found and to take the appropriate action to secure the wastewater overflow area, properly report to the appropriate regulatory agencies, relieve the cause of the overflow, and ensure that the affected area is cleaned as soon as possible to minimize health hazards to the public and protect the environment. The City's goal is to respond to sewer system overflows as soon as possible following notification. The City will follow reporting procedures in regards to sewer spills as set forth by the North Coast Regional Water Quality Control Board (*NCRWQCB)* and the California State Water Resources Control Board (*SWRCB)***.**

3. Definitions As Used In This OERP

CALIFORNIA INTEGRATED WATER QUALITY SYSTEM (CIWQS): Refers to the State Water Resources Control Board online electronic reporting system that is used to report SSOs, certify completion of the SSMP, and provide information on the sanitary sewer system.

FROG – Fats, Roots, Oils, and Grease: FOG refers to fats, oils, and grease typically associated with food preparation and cooking activities that can cause blockages in the sanitary sewer system. Tree root invasion (R) presents an additional problem. If a mat of root hair forms in the sewer line it slows the flow of wastewater and exacerbates the rate of accumulation of FOG materials.

LEGALLY RESPONSIBLE OFFICIAL (LRO): Refers to an individual who has the authority to certify reports and other actions that are submitted through CIWQS.

MAINLINE SEWER: Refers to City wastewater collection system piping that is not a private lateral connection to a user.

MAINTENANCE HOLE OR MANHOLE: Refers to an engineered structure that is intended to provide access to a sanitary sewer for maintenance and inspection.

NOTIFICATION OF AN SSO: Refers to the time at which the City becomes aware of an SSO event through observation or notification by the public or other source.

NUISANCE - California Water Code section 13050, subdivision (m), defines nuisance as anything that meets all of the following requirements:

a. Is injurious to health, or is indecent or offensive to the senses, or an obstruction to the free use of property, so as to interfere with the comfortable enjoyment of life or property.

© 2004-2014 DKF Solutions Group, LLC. All rights reserved.

b. Affects at the same time an entire community or neighborhood, or any considerable number of persons, although the extent of the annoyance or damage inflicted upon individuals may be unequal.

c. Occurs during, or as a result of, the treatment or disposal of wastes.

PREVENTATIVE MAINTENANCE: Refers to maintenance activities intended to prevent failures of the wastewater collection system facilities (e.g. cleaning, CCTV, inspection).

PRIVATE LATERAL SEWAGE DISCHARGES – Sewage discharges that are caused by blockages or other problems within a privately owned lateral.

SANITARY SEWER OVERFLOW (SSO) - Any overflow, spill, release, discharge or diversion of untreated or partially treated wastewater from a sanitary sewer system. SSOs include:

(i) Overflows or releases of untreated or partially treated wastewater that reach waters of the United States;

(ii) Overflows or releases of untreated or partially treated wastewater that do not reach waters of the United States; and

(iii) Wastewater backups into buildings and on private property that are caused by blockages or flow conditions within the publicly owned portion of a sanitary sewer system.

SSOs that include multiple appearance points resulting from a single cause will be considered one SSO for documentation and reporting purposes in CIWQS.

NOTE: Wastewater backups into buildings caused by a blockage or other malfunction of a building lateral that is privately owned are not SSOs.

SSO Categories:

Category 1: Discharge of untreated or partially treated wastewater of any volume resulting from a sanitary sewer system failure or flow condition that either:

- Reaches surface water and/or drainage channel tributary to a surface water; or
- Reached a Municipal Separate Storm Sewer System (MS4) and was not fully captured and returned to the sanitary sewer system or otherwise captured and disposed of properly.

Category 2: Discharge of untreated or partially treated wastewater greater than or equal to 1,000 gallons resulting from a sanitary sewer system failure or flow condition that either:

- Does not reach surface water, a drainage channel, or an MS4, or
- The entire SSO discharged to the storm drain system was fully recovered and disposed of properly.

Category 3: All other discharges of untreated or partially treated wastewater resulting from a sanitary sewer system failure or flow condition.

SANITARY SEWER SYSTEM: Any publicly-owned system of pipes, pump stations, sewer lines, or other conveyances, upstream of a wastewater treatment plant headworks used to collect and convey wastewater to the publicly owned treatment facility. Temporary storage and conveyance facilities (such as vaults, temporary piping, construction trenches, wet wells, impoundments, tanks, etc.) are considered to be part of the sanitary sewer system, and discharges into these temporary storage facilities are not considered to be SSOs.

© 2004-2014 DKF Solutions Group, LLC. All rights reserved.

SENSITIVE AREA: Refers to areas where an SSO could result in a fish kill or pose an imminent or substantial danger to human health (e.g. parks, aquatic habitats, etc.)

SEWER SERVICE LATERAL: Refers to the piping that conveys sewage from the building to the City's wastewater collection system.

UNTREATED OR PARTIALLY TREATED WASTEWATER: Any volume of waste discharged from the sanitary sewer system upstream of a wastewater treatment plant headworks.

WATERS OF THE STATE*:* Waters of the State (or waters of the United States) means any surface water, including saline waters, within the boundaries of California. In case of a sewage spill, storm drains are considered to be waters of the State unless the sewage is completely contained and returned to the wastewater collection system and that portion of the storm drain is cleaned.

4. State Regulatory Requirements for Element 6, Overflow Emergency Response Plan

GWDR Requirement

The collection system agency shall develop and implement an overflow emergency response plan that identifies measures to protect public health and the environment. At a minimum, this plan must include the following:

(a) Proper notification procedures so that the primary responders and regulatory agencies are informed of all SSOs in a timely manner;
(b) A program to ensure appropriate response to all overflows;
(c) Procedures to ensure prompt notification to appropriate regulatory agencies and other potentially affected entities (e.g. health agencies, regional water boards, water suppliers, etc.) of all SSOs that potentially affect public health or reach the waters of the State in accordance with the Monitoring and Reporting Program (MRP). All SSOs shall be reported in accordance with this MRP, the California Water Code, other State Law, and other applicable Regional Water Board Waste Discharge Requirements or National Pollutant Discharge Elimination System (NPDES) permit requirements. The Sewer System Management Plan should identify the officials who will receive immediate notification;
(d) Procedures to ensure that appropriate staff and contractor personnel are aware of and follow the Emergency Response Plan and are appropriately trained;
(e) Procedures to address emergency operations, such as traffic and crowd control and other necessary response activities; and
(f) A program to ensure that all reasonable steps are taken to contain untreated wastewater and prevent discharge of untreated wastewater to Waters of the United States and minimize or correct any adverse impact on the environment resulting from the SSOs, including such accelerated or additional monitoring as may be necessary to determine the nature and impact of the discharge.

The City complies with the requirement to make the Sewer System Management Plan publically available by submitting an electronic copy to the State Water Resources Control Board.

5. Goals

The City's goals with respect to responding to SSOs are:

- Work safely;
- Respond quickly to minimize the volume of the SSO;
- Eliminate the cause of the SSO;
- Prevent sewage system overflows or leaks from entering the storm drain system or receiving waters to the maximum extent practicable;

© 2004-2014 DKF Solutions Group, LLC. All rights reserved.

- Contain the spilled wastewater to the extent feasible;
- Minimize public contact with the spilled wastewater;
- Mitigate the impact of the SSO;
- Meet the regulatory reporting requirements;
- Evaluate the causes of failure related to certain SSOs; and
- Revise response procedures resulting from the debrief and failure analysis of certain SSOs.

6. SSO Detection and Notification

ref. SWRCB Order No. 2006-0003-DWQ VI(a)

The processes that are employed to notify the City of the occurrence of an SSO include: observation by the public, receipt of an alarm, or observation by City staff or other public employees during the normal course of their work.

6.1 PUBLIC OBSERVATION

Public observation is the most common way that the City is notified of blockages and spills. Contact numbers and information for reporting sewer spills and backups are in the phone book and on the City's website: http://thecityofwillits.com. **The City's telephone number for reporting sewer problems is (707) 459-6122.**

When a report of a sewer spill or backup is made either during or after normal work hours, Police non-emergency dispatch receives the call and routes it to the Sewer Department.

When calls are received, either during or after normal work hours, the individual receiving the call will collect the following information:

- Time and date of call
- Specific location of potential overflow or incident
- Nature of call
- In case of SSO, estimated start time of overflow and how long it has been occurring
- Caller's name, telephone number, and address
- Caller's observations (e.g., odor, duration, location on property, known impacts, indication if surface water impacted, appearance at cleanout or manhole)
- Other relevant information

The following (Figure 6.1) is an overview of receiving a sewage overflow or backup report *(see next page):*

© 2004-2014 DKF Solutions Group, LLC. All rights reserved.

Figure 6.1 Overview of Receiving a Sewage Overflow or Backup Report Procedure

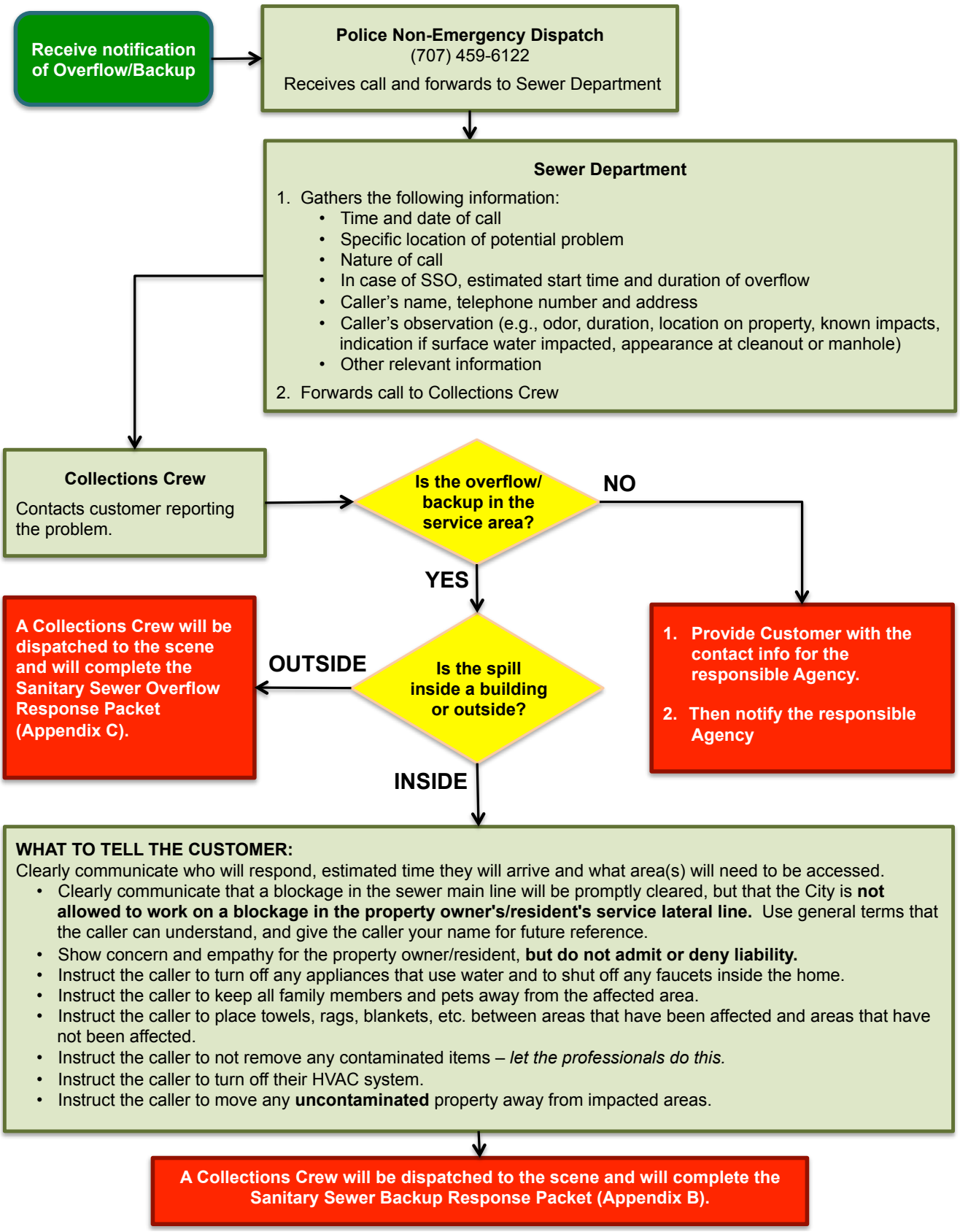

© 2004-2014 DKF Solutions Group, LLC. All rights reserved.

6.2 CITY STAFF OBSERVATION

City staff conducts periodic inspections of its sewer system facilities as part of their routine activities. Any problems noted with the sewer system facilities are reported to appropriate City staff that, in turn, responds to emergency situations. Work orders are issued to correct non-emergency conditions.

6.3 CONTRACTOR OBSERVATION

The following procedures are to be followed in the event that a contractor causes or witnesses a Sanitary Sewer Overflow. If the contractor causes or witnesses an SSO they will:

1. Immediately notify the City by calling Police Non-Emergency Dispatch at (707) 459-6122
2. Protect storm drains
3. Protect the public
4. Provide information to City Collections Crew such as start time, appearance point(s), suspected cause, weather conditions, etc.
5. Direct ALL media and public relations requests to the City Manager at (707) 459-4601

Appendix E includes a handout for Contractors with a flowchart of the above procedures.

© 2004-2014 DKF Solutions Group, LLC. All rights reserved.

7. SSO Response Procedures

ref. SWRCB Order No. 2006-0003-DWQ Element 6(b)

7.1 Sewer Overflow/Backup Response Summary

The City will respond to SSOs as soon as feasible following notification of an overflow/backup or unauthorized discharge. The following (Figure 7.1) is an overview of the response activities.

Figure 7.1 Overview of SSO/Backup Response

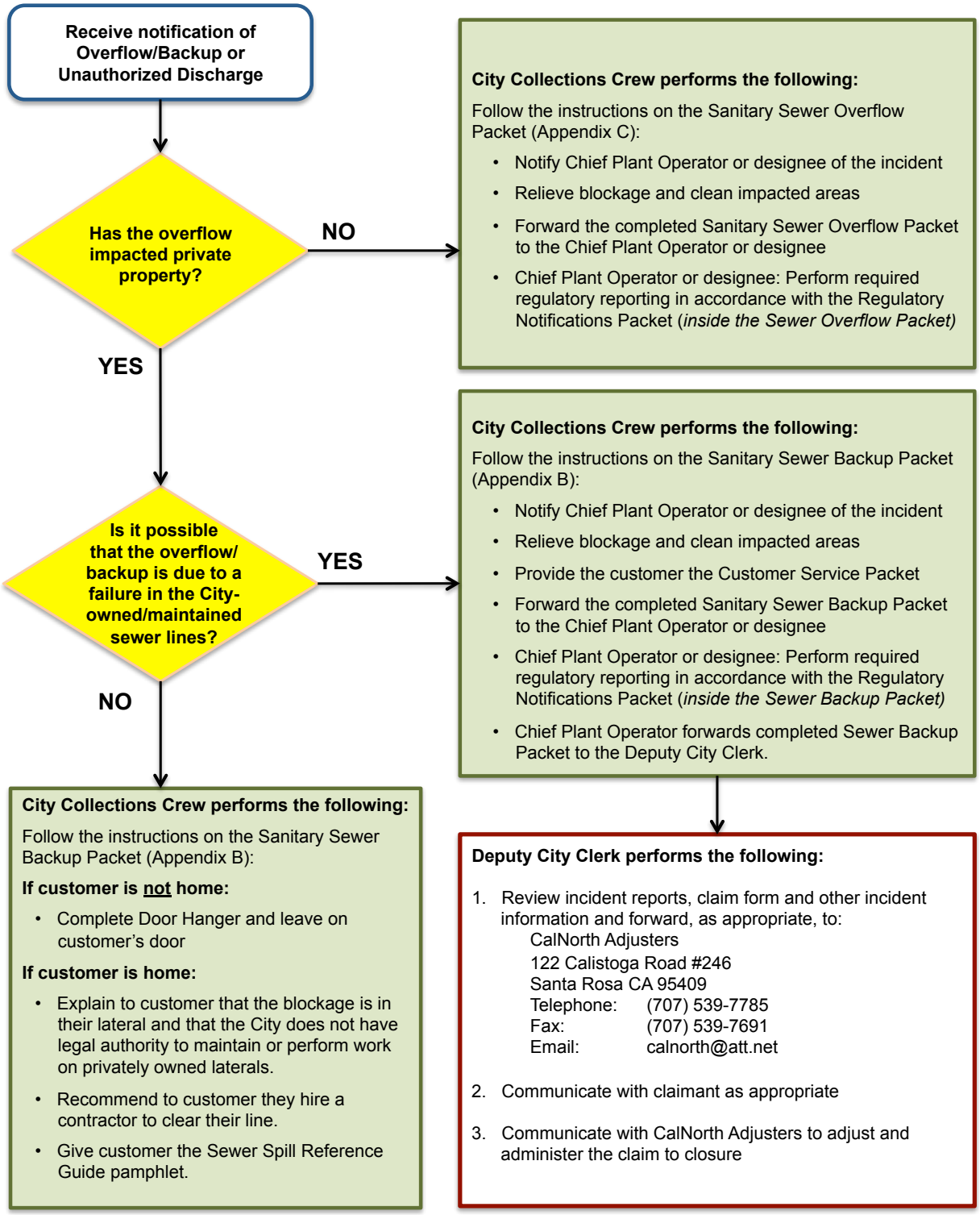

© 2004-2014 DKF Solutions Group, LLC. All rights reserved.

7.2 First Responder Priorities

The first responder's priorities are:

- To follow safe work practices.
- To respond promptly with the appropriate and necessary equipment.
- To contain the spill wherever feasible.
- To restore the flow as soon as practicable.
- To minimize public access to and/or contact with the spilled sewage.
- To promptly notify the Chief Plant Operator in event of major SSO.
- To return the spilled sewage to the sewer system.
- To restore the area to its original condition (or as close as possible).
- To photograph and document affected and unaffected areas from a spill.

7.3 Safety

The first responder is responsible for following safety procedures at all times. Special safety precautions must be observed when performing sewer work. There may be times when City personnel responding to a sewer system event are not familiar with potential safety hazards peculiar to sewer work. In such cases it is appropriate to take the time to discuss safety issues, consider the order of work, and check safety equipment before starting the job. This includes use of gas monitoring detectors for air quality in manholes and traffic controls at the site.

7.4 Initial Response

The first responder must respond to the reporting party/problem site and visually check for potential sewer stoppages or overflows.

The first responder will:

- Note arrival time at the site of the overflow/backup.
- Verify the existence of a public sewer system spill or backup.
- Determine if the overflow or blockage is from a public or private sewer.
- Identify and assess the affected area and extent of spill.
- Contact caller if time permits.
- If the spill is large or in a sensitive area, document conditions upon arrival with photographs. Decide whether to proceed with clearing the blockage to restore the flow or to initiate containment measures. The guidance for this decision is:
    - Small spills (i.e., spills that are easily contained) – proceed with clearing the blockage.
    - Moderate or large spill where containment is anticipated to be simple – proceed with the containment measures.
    - Moderate or large spills where containment is anticipated to be difficult – proceed with clearing the blockage; however, whenever deemed necessary, call for additional assistance and implement containment measures.
- Take steps to contain the SSO. For detailed procedures refer to Appendix B: Sanitary Sewer Backup Procedures, and Appendix C: Sanitary Sewer Overflow Packet.

7.5 Initiate Spill Containment Measures

The first responder will attempt to contain as much of the spilled sewage as possible using the following steps:

- Determine the immediate destination of the overflowing sewage.

© 2004-2014 DKF Solutions Group, LLC. All rights reserved.

- Plug storm drains using air plugs, sandbags, and/or plastic mats to contain the spill, whenever appropriate. If spilled sewage has made contact with the storm drainage system, attempt to contain the spilled sewage by plugging downstream storm drainage facilities.
- Contain/direct the spilled sewage using dike/dam or sandbags.
- Pump around the blockage/pipe failure.

For detailed procedures refer to Appendix C: Sanitary Sewer Overflow Packet.

7.6 Restore Flow

Using the appropriate cleaning equipment, set up downstream of the blockage and hydro-clean upstream from a clear manhole. Attempt to remove the blockage from the system and observe the flows to ensure that the blockage does not reoccur downstream. If the blockage cannot be cleared within a reasonable time from arrival, or sewer requires construction repairs to restore flow, then initiate containment and/or bypass pumping. If assistance is required, immediately contact other employees, contractors, and equipment suppliers. For detailed procedures refer to Appendix C: Sanitary Sewer Overflow Packet.

7.7 Equipment

This section provides a list of specialized equipment that may be used to support this Overflow Emergency Response Plan. Standard Operating Procedures are stored at the Corp Yard.

- *Closed Circuit Television (CCTV) Inspection Unit* – A CCTV Inspection Unit is required to determine the root cause for all SSOs from gravity sewers.
- *Camera* -- A digital or disposable camera is required to record the conditions upon arrival, during clean up, and upon departure.
- *Emergency Response Trucks* -- A utility body pickup truck, or open bed is required to store and transport the equipment needed to effectively respond to sewer emergencies. The equipment and tools will include containment and clean up materials.
- *Portable Generators, Portable Pumps, Piping, and Hoses* – Equipment used to bypass pump, divert, or power equipment to mitigate an SSO.
- *Combination Sewer Cleaning Trucks* -- Combination high velocity sewer cleaning trucks with vacuum tanks are required to clear blockages in gravity sewers, vacuum spilled sewage, and wash down the impacted area following the SSO event.
- *Air plugs, sandbags and plastic mats*
- *SSO Sampling Kits*
- *Portable Lights*

8. Recovery and Cleanup

ref. SWRCB Order No. 2006-0003-DWQ Element 6(e)

The recovery and cleanup phase begins immediately after the flow has been restored and the spilled sewage has been contained to the extent possible. The SSO recovery and cleanup procedures are:

© 2004-2014 DKF Solutions Group, LLC. All rights reserved.

8.1 Estimate the Volume of Spilled Sewage

Use the methods outlined in the Sanitary Sewer Backup Packet (Appendix B), Sanitary Sewer Overflow Packet (Appendix C), and/or the Field Guide to estimate the volume of the spilled sewage. Wherever possible, document the estimate using photos and/or video of the SSO site before and during the recovery operation.

8.2 Recovery of Spilled Sewage

Vacuum up and/or pump the spilled sewage and rinse water, and discharge it back into the sanitary sewer system.

8.3 Clean-up and Disinfection

Clean up and disinfection procedures will be implemented to reduce the potential for human health issues and adverse environmental impacts that are associated with an SSO event. The procedures described are for dry weather conditions and will be modified as required for wet weather conditions. Where cleanup is beyond the capabilities of City staff, a cleanup contractor will be used.

Private Property

City crews are responsible for the cleanup when the property damage is minor in nature and is outside of private building dwellings, such as in front, side and backyards, easements, etc. In all other cases, affected property owners can call a water damage restoration contractor to complete the cleanup and restoration. If the overflow into property is the definite cause of City system failure, the property owner can call out a water damage restoration contractor to complete the cleanup and restoration. In both cases, City claim forms may be issued if requested by the property owners.

Hard Surface Areas

Collect all signs of sewage solids and sewage-related material either by protected hand or with the use of rakes and brooms. Wash down the affected area with clean water and/or deozyme or similar non-toxic biodegradable surface disinfectant until the water runs clear. The flushing volume will be approximately three times the estimated volume of the spill. Take reasonable steps to contain and vacuum up the wastewater. Allow area to dry. Repeat the process if additional cleaning is required.

Landscaped and Unimproved Natural Vegetation

Collect all signs of sewage solids and sewage-related material either by protected hand or with the use of rakes and brooms. Wash down the affected area with clean water until the water runs clear. The flushing volume will be approximately three times the estimated volume of the spill. Either contain or vacuum up the wash water so that none is released. Allow the area to dry. Repeat the process if additional cleaning is required.

Natural Waterways

The Department of Fish and Wildlife will be notified by CalOES for SSOs greater than or equal to 1,000 gallons.

Wet Weather Modifications

Omit flushing and sampling during heavy storm events (i.e., sheet of rainwater across paved surfaces) with heavy runoff where flushing is not required and sampling would not provide meaningful results.

© 2004-2014 DKF Solutions Group, LLC. All rights reserved.

8.4 Public Notification

Signs will be posted and barricades put in place to keep vehicles and pedestrians away from contact with spilled sewage. County Environmental Health instructions and directions regarding placement and language of public warnings will be followed when directed. Additionally, the Chief Plant Operator will use his/her best judgment regarding supplemental sign placement in order to protect the public and local environment. Signs will not be removed until directed by County Environmental Health, Chief Plant Operator, or designee.

Creeks, streams and beaches that have been contaminated as a result of an SSO will be posted at visible access locations until the risk of contamination has subsided to acceptable background bacteria levels. The warning signs, once posted, will be checked at least every day to ensure that they are still in place. Photographs of sign placement will be taken.

In the event that an overflow occurs at night, the location will be inspected first thing the following day. The field crew will look for any signs of sewage solids and sewage-related material that may warrant additional cleanup activities.

When contact with the local media is deemed necessary, the City Manager or their designee will provide the media with all revelvant information.

9. Water Quality

ref. SWRCB Order No. 2006-0003-DWQ Element 6(f)

9.1 Water Quality Sampling and Testing

Water quality sampling and testing is required for Category 1 SSOs of 50,000 gallons or greater to determine the extent and impact of the SSO. The water quality sampling procedures must be implemented within 48 hours and include the following:

- The first responders will collect samples as soon as possible after the discovery and mitigation of the SSO event.
- The water quality samples will be collected from upstream of the spill, from the spill area, and downstream of the spill in flowing water (e.g. creeks). The water quality samples will be collected near the point of entry of the spilled sewage.
- The samples shall then be brought to Alpha Labs.

9.2 Water Quality Monitoring Plan

The City Water Quality Monitoring Plan will be implemented immediately upon discovery of any Category 1 SSO of 50,000 gallons or more in order to assess impacts from SSOs to surface waters. The SSO Water Quality Monitoring Program will:

1. Contain protocols for water quality monitoring.
2. Account for spill travel time in the surface water and scenarios where monitoring may not be possible (e.g. safety, access restrictions, etc.)
3. Require water quality analyses for ammonia and bacterial indicators to be performed by an accredited or certified laboratory.
4. Require monitoring instruments and devices used to implement the SSO Water Quality Monitoring Program to be properly maintained and calibrated, including any records to document maintenance and calibration, as necessary, to ensure their continued accuracy.

© 2004-2014 DKF Solutions Group, LLC. All rights reserved.

5. Within 48 hours of the City becoming aware of the SSO, require water quality sampling for ammonia and total and fecal coliform.
6. Observe proper chain of custody procedures.

9.3 SSO Technical Report

The City will submit an SSO Technical Report to the CIWQS Online SSO Database within 45 calendar days of the SSO end date for any SSO in which 50,000 gallons or greater are spilled to surface waters. The Chief Plant Operator will supervise the preparation of this report and will certify this report. This report, which does not preclude the Water Boards from requiring more detailed analyses if requested, shall include at a minimum, the following:

Causes and Circumstances of the SSO:

- Complete and detailed explanation of how and when the SSO was discovered.
- Diagram showing the SSO failure point, appearance point(s), and final destination(s).
- Detailed description of the methodology employed and available data used to calculate the volume of the SSO and, if applicable, the SSO volume recovered.
- Detailed description of the cause(s) of the SSO.
- Copies of original field crew records used to document the SSO.
- Historical maintenance records for the failure location.

City's Response to SSO:

- Chronological narrative description of all actions taken by the City to terminate the spill.
- Explanation of how the SSMP Overflow Emergency Response Plan was implemented to respond to and mitigate the SSO.
- Final corrective action(s) completed and/or planned to be completed, including a schedule for actions not yet completed.

Water Quality Monitoring:

- Description of all water quality sampling activities conducted including analytical results and evaluation of the results.
- Detailed location map illustrating all water quality sampling points.

10. Sewer Backup Into/Onto Private Property Claims Handling Policy

It is the policy of the City that a claims form shall be offered to anyone wishing to file a claim. The following procedures will be observed for all sewer overflows/backups into/onto private property:

- City staff will offer a City claim form irrespective of fault whenever it is possible that the sanitary sewer backup may have resulted from an apparent blockage in the City-owned sewer lines or whenever a City customer requests a claim form. The claim may later be rejected if subsequent investigations into the cause of the loss indicate the City was not at fault.

- It is the responsibility of the Collections Crew to gather information regarding the incident and notify the Chief Plant Operator or his/her designee.

- It is the responsibility of the Deputy City Clerk to review all claims and to oversee the adjustment and administration of the claim to closure.

© 2004-2014 DKF Solutions Group, LLC. All rights reserved.

11. Notification, Reporting, Monitoring and Recordkeeping Requirements

ref. SWRCB Order No. 2006-0003-DWQ Element 6(c)

In accordance with the Statewide General Waste Discharge Requirements for Sanitary Sewer Systems (SSS GWDRs), the City of Willits maintains records for each sanitary sewer overflow. Records include:

- Documentation of response steps and/or remedial actions
- Photographic evidence to document the extent of the SSO, field crew response operations, and site conditions after field crew SSO response operations have been completed. The date, time, location, and direction of photographs taken will be documented.
- Documentation of how any estimations of the volume of discharged and/or recovered volumes were calculated including all assumptions made.
- Regulator required notifications are outlined in Section 11.1 on the following page.

© 2004-2014 DKF Solutions Group, LLC. All rights reserved.

11.1 Regulator Required Notifications

ELEMENT	REQUIREMENT	METHOD
NOTIFICATION	Within two hours of becoming aware of any Category 1 SSO greater than or equal to 1,000 gallons discharged to surface water or spilled in a location where it probably will be discharged to surface water, the City will notify the California Office of Emergency Services (CalOES) and obtain a notification control number.	Call Cal OES at: **(800) 852-7550**
REPORTING	• Category 1 SSO: The City will submit draft report within three business days of becoming aware of the SSO and certify within 15 calendar days of SSO end date. • Category 2 SSO: The City will submit draft report within 3 business days of becoming aware of the SSO and certify within 15 calendar days of the SSO end date. • Category 3 SSO: The City will submit certified report within 30 calendar days of the end of month in which SSO the occurred. • SSO Technical Report: The City will submit within 45 calendar days after the end date of any Category 1 SSO in which 50,000 gallons or greater are spilled to surface waters. • "No Spill" Certification: The City will certify that no SSOs occurred within 30 calendar days of the end of the month or, if reporting quarterly, the quarter in which no SSOs occurred. • Collection System Questionnaire: The City will update and certify every 12 months	Enter data into the CIWQS Online SSO Database[1] (http://ciwqs.waterboards.ca.gov/) certified by the Legally Responsible Official(s)[2]. All information required by CIWQS will be captured in the Sanitary Sewer Overflow Report. Certified SSO reports may be updated by amending the report or adding an attachment to the SSO report within 120 calendar days after the SSO end date. After 120 days, the State SSO Program Manager must be contacted to request to amend an SSO report along with a justification for why the additional information was not available prior to the end of the 120 days.
WATER QUALITY MONITORING	The City will conduct water quality sampling within 48 hours after initial SSO notification for Category 1 SSOs in which 50,000 gallons or greater are spilled to surface waters.	Water quality results will be uploaded into CIWQS for Category 1 SSOs in which 50,000 gallons or greater are spilled to surface waters.
RECORD KEEPING	The City will maintain the following records: • SSO event records. • Records documenting Sanitary Sewer Management Plan (SSMP) implementation and changes/updates to the SSMP. • Records to document Water Quality Monitoring for SSOs of 50,000 gallons or greater spilled to surface waters. • Collection system telemetry records if relied upon to document and/or estimate SSO Volume.	Self-maintained records shall be available during inspections or upon request.

[1] In the event that the CIWQS online SSO database is not available, the Chief Plant Operator will notify SWRCB by phone in accordance with the time schedules identified above. In such an event, the City will submit the appropriate reports using the CIWQS online SSO database when the database becomes available. A copy of all documents that certify the submittal in fulfillment of this section shall be retained in the SSO file.

[2] The City always has at least one LRO. Any change in the LRO(s) including deactivation or a change to contact information, will be submitted to the SWRCB within 30 days of the change by calling (866) 792-4977 or emailing help@ciwqs.waterboards.ca.gov.

© 2004-2014 DKF Solutions Group, LLC. All rights reserved.

For reporting purposes, if one SSO event of whatever category results in multiple appearance points in a sewer system, a single SSO report is required in CIWQS that includes the GPS coordinates for the location of the SSO appearance point closest to the failure point, blockage or location of the flow condition that cause the SSO, and descriptions of the locations of all other discharge points associated with the single SSO event.

11.2 Complaint Records

The City maintains records of all complaints received whether or not they result in sanitary sewer overflows. These complaint records include:

- Date, time, and method of notification
- Date and time the complainant or informant first noticed the SSO or occurrence related to the call
- Narrative description describing the complaint
- A statement from the complainant or informant, if they know, of whether or not the potential SSO may have reached waters of the state
- Name, address, and contact telephone number of the complainant or informant reporting the potential SSO (if not reported anonymously)
- Follow-up return contact information for each complaint received (if not reported anonymously)
- Final resolution of the complaint with the original complainant
- Work service request information used to document all feasible and remedial actions taken

All complaint records will be maintained for a minimum of five years whether or not they result in an SSO. SSO records are kept under the direction and control of the Chief Plant Operator.

12. Post SSO Event Debriefing

ref. SWRCB Order No. 2006-0003-DWQ Element 6(d)

Every SSO event is an opportunity to evaluate the City response and reporting procedures. Each overflow event is unique, with its own elements and challenges including volume, cause, location, terrain, climate, and other parameters.

As soon as possible after Category 1 and Category 2 SSO events, all of the participants, from the person who received the call to the last person to leave the site, will meet to review the procedures used and to discuss what worked and where improvements could be made in preventing or responding to and mitigating future SSO events. The results of the debriefing will be documented and tracked to ensure the action items are completed as scheduled.

13. Failure Analysis Investigation

ref. SWRCB Order No. 2006-0003-DWQ Element 6(d)

The objective of the failure analysis investigation is to determine the “root cause” of the SSO and to identify corrective action(s) needed that will reduce or eliminate future potential for the SSO to recur or for other SSOs to occur.

The investigation will include reviewing all relevant data to determine appropriate corrective action(s) for the line segment. The investigation will include:

- Reviewing and completing the Sanitary Sewer Overflow Report (in Appendix B and in Appendix C) and any other documents related to the incident
- Reviewing the incident timeline and other documentation regarding the incident

© 2004-2014 DKF Solutions Group, LLC. All rights reserved.

- Reviewing communications with the reporting party and witness
- Reviewing volume estimate, volume recovered estimate, volume estimation assumptions and associated drawings
- Reviewing available photographs
- Interviewing staff that responded to the spill
- Reviewing past maintenance records
- Reviewing past CCTV records,
- Conducting a CCTV inspection to determine the condition of all line segments immediately following the SSO and reviewing the video and logs,
- Reviewing any Fats, Oils, Roots and Grease (FROG) related information or results
- Post SSO debrief records
- Interviews with the public at the SSO location

The product of the failure analysis investigation will be the determination of the root cause and the identification and scheduling of the corrective actions. The Collection System Failure Analysis Form (in Appendix B and in Appendix C) will be used to document the investigation.

14. SSO Response Training

ref. SWRCB Order No. 2006-0003-DWQ Element 6(d)

This section provides information on the training that is required to support this Overflow Emergency Response Plan.

14.1 Initial and Annual Refresher Training

All City personnel who may have a role in responding to, reporting, and/or mitigating a sewer system overflow will receive training on the contents of this OERP. All new employees will receive training before they are placed in a position where they may have to respond. Current employees will receive annual refresher training on this plan and the procedures to be followed. The City will document all training.

Affected employees will receive annual training on the following topics by knowledgeable trainers:

- The City's Overflow Emergency Response Plan and Sanitary Sewer Management Plan
- Sanitary Sewer Overflow Volume Estimation Techniques
- Researching and documenting Sanitary Sewer Overflow Start Times
- Impacted Surface Waters: Response Procedures
- State Water Resources Control Board Employee Knowledge Expectations
- Employee Core Competency Evaluations on Sanitary Sewer Operations
- Water Quality Sampling Plan

The City will verify that annual safety training requirements are current for each employee, and that employees are competent in the performance of all core competencies. This will be verified through electronic testing, interviews and observations. The City will address, through additional training/instruction, any identified gaps in required core competencies.

© 2004-2014 DKF Solutions Group, LLC. All rights reserved.

Through SWRCB Employee Knowledge Expectations training the employee will be able to answer the following:

1. Please briefly describe your name and job title.
2. Please describe for us approximately when you started in this field and how long you have worked for your agency.
3. Please expand on your current position duties and role in responding in the field to any SSO complaints.
4. Please describe your SOPs used to respond/mitigate SSOs when they occur.
5. Describe any training your agency provides or sends you to for conducting spill volume estimates.
6. We are interested in learning more about how your historical SSO response activities have worked in the field. We understand from discussions with management earlier that you use the OERP from the SSMP. Please elaborate on how you implement and utilize the procedures in the plan.
7. Historically, before any recent changes, can you please walk us through how you would typically receive and respond to any SSO complaints in the field?
8. Can you tell us who is responsible for estimating SSO volumes discharged? If it is you, please describe how you go about estimating the SSO volume that you record on the work order/service request forms?
9. What other information do you collect or record other than what is written on the work order form?
10. Describe if and when you ever talk with people that call in SSOs (either onsite or via telephone) to further check out when the SSO might have occurred based on what they or others know? If you do this, can you tell us where this information is recorded?
11. We understand you may be instructed to take pictures of some sewer spills/backups into structures. Other than these SSOs, when else would you typically take any pictures of an SSO?
12. Please walk us through anything else you'd like to add to help us better understand how your field crews respond and mitigate SSO complaints.

14.2 SSO Response Drills

Periodic training drills or field exercises will be held to ensure that employees are up to date on these procedures, equipment is in working order, and the required materials are readily available. The training drills will cover scenarios typically observed during sewer related emergencies (e.g. mainline blockage, mainline failure, and lateral blockage). The results and the observations during the drills will be recorded and action items will be tracked to ensure completion.

14.3 SSO Training Record Keeping

Records will be kept of all training that is provided in support of this plan. The records for all scheduled training courses and for each overflow emergency response training event and will include date, time, place, content, name of trainer(s), and names and titles of attendees.

14.4 Contractors Working On City Sewer Facilities

All construction contractors working on City sewer facilities will be required to develop a project-specific OERP, will provide project personnel with training regarding the content of the contractor's OERP and their role in the event of an SSO, and to follow that OERP in the event that they cause or observe an SSO. Emergency response procedures shall be discussed at project pre-construction meetings, regular project meetings and after any contractor involved incidents.

© 2004-2014 DKF Solutions Group, LLC. All rights reserved.

All service contractors will be provided, and required to observe contractor procedures. See Appendix E: Contractor Orientation.

15. Authority

- Health & Safety Code Sections 5410-5416
- CA Water Code Section 13271
- Fish & Wildlife Code Sections 5650-5656
- State Water Resources Control Board Order No. 2006-0003-DWQ
- State Water Resources Control Board Order 2013-009-DWQ effective September 9, 2013

16. References

- Sanitary Sewer Overflow and Backup Response Field Guide, 2013, DKF Solutions Group, LLC
- Appendix A: Regulatory Notifications Packet
- Appendix B: Sanitary Sewer Backup Packet
- Appendix C: Sanitary Sewer Overflow Packet
- Appendix D: Field Sampling Kit
- Appendix E: Contractor Orientation

© 2004-2014 DKF Solutions Group, LLC. All rights reserved.

Appendix A

REGULATORY NOTIFICATIONS PACKET

© 2004-2014 DKF Solutions Group, LLC. All rights reserved.

Instructions:

1. Receive call from on-site crew reporting a Sanitary Sewer Overflow.
2. Open this packet.
3. Refer to the Regulatory Reporting Guide (A-1) for instructions.
4. Use the SSO Reporting Checklist for the appropriate category of spill (A-2a or A-2b) to document that all notifications are made according to the reporting schedule.

Contents:

Form	Page Number
Regulatory Reporting Guide	A-1
Reporting Checklist: Category 1	-2a
Reporting Checklist: Categories 2 and 3	-2b

Print on 6”x9” envelope

© 2004-2014 DKF Solutions Group. All rights reserved.

Reporting Instructions				
Deadline	**See reverse side for definitions of the categories** of spills of untreated or partially treated wastewater from publically owned sanitary sewer system			**Spill from Private Lateral**
	Category 1	**Category 2**	**Category 3**	
2 hours after awareness of SSO	If the SSO is greater than or equal to 1,000 gallons, call CalOES at (800) 852-7550	-	-	-
48 Hours after awareness of SSO	If 50,000 gal or more will likely reach receiving waters, begin water quality sampling and initiate impact assessment	-	-	-
3 Days after awareness of SSO	Submit Draft Spill Report in the CIWQS* database	Submit Draft Spill Report in the CIWQS* database	-	-
15 Days after response conclusion	Certify Spill Report in CIWQS*. Update as needed until 120 days after SSO end time	Certify Spill Report in the CIWQS* database. Update as needed until 120 days after SSO end time	-	-
30 Days after end of calendar month in which SSO occurred	-	-	Certify Spill Report in the CIWQS* database. Update as needed until 120 days after SSO end time	-
45 days after SSO end time	If 50,000 gal or more were not recovered, submit SSO Technical Report using CIWQS*	-	-	-

* In the event that the CIWQS online SSO database is not available, make notifications to the State Water Resources Control Board (SWRCB) by phone until the CIWQS online SSO database becomes available.

Note: For reporting purposes, if one SSO event results in multiple appearance points, complete one SSO report in the CIWQS SSO Online Database, and report the location of the SSO failure point, blockage or location of the flow condition that caused the SSO, in the CIWQS SSO Online Database, including all the discharge points associated with the SSO event.

© 2004-2014 DKF Solutions Group, LLC. All rights reserved.

Contact Information

Contact	Telephone/Fax/Email
CalOES	(800) 852-7550
State Water Resources Control Board (SWRCB):	
Russell Norman, P.E.	(916) 323-5598 Russell.Norman@waterboards.ca.gov
Victor Lopez, Water Resources Control Engineer	(916) 323-5511 Victor.Lopez@waterboards.ca.gov

Authorized Personnel

All Collections Crew members are authorized to make the 2-hour notification to CalOES in the event of a Category 1 SSO greater than or equal to 1,000 gallons.

As the City's Legally Responsible Official (LRO) the Chief Plant Operator is authorized to perform regulatory reporting and to electronically sign and certify SSO reports in CIWQS:

Definitions of SSO Categories

The response crew will complete the SSO Report form in the SSO Packet to document how the category was determined.

Category	Definition
Category 1:	Discharge of untreated or partially treated wastewater of any volume resulting from a sanitary sewer system failure or flow condition that either: • Reaches surface water and/or drainage channel tributary to a surface water; or • Reached a Municipal Separate Storm Sewer System (MS4) and was not fully captured and returned to the sanitary sewer system or otherwise captured and disposed of properly.
Category 2:	Discharge of untreated or partially treated wastewater greater than or equal to 1,000 gallons resulting from a sanitary sewer system failure or flow condition that either: • Does not reach surface water, a drainage channel, or an MS4, or • The entire SSO discharged to the storm drain system was fully recovered and disposed of properly.
Category 3:	All other discharges of untreated or partially treated wastewater resulting from a sanitary sewer system failure or flow condition

© 2004-2014 DKF Solutions Group, LLC. All rights reserved.

Regulatory Notifications Packet

Category 1 SSO Reporting Checklist

A-2a

Use this Checklist for Category 1 SSOs only

STEP 1: Receive call from crew.

☐ If the SSO is greater than or equal to 1,000 gallons, confirm whether or not they have notified CalOES. If so, complete the information in Step 2.

STEP 2: 2-hour Notification

If the SSO is greater than or equal to 1,000 gallons, notify CalOES within 2 hours of the time the agency was notified of the SSO.

☐ **Notify CalOES** at (800) 852-7550:

- Date Called: _____
- Time called: _____:_____ ☐AM ☐PM
- CalOES Control number: _____
- City personnel who called CalOES: *Name* _____
  Title _____
- Individual they spoke to at CalOES: _____

STEP 3: Within 48-Hours after awareness of SSO

☐ Only if 50,000 gallons or more was not recovered, implement Water Quality Monitoring Plan.

STEP 4: Within 3 Days after awareness of SSO

☐ Submit a Draft Spill Report using the CIWQS online reporting database.

STEP 5: Within 15 Days after response conclusion

☐ LRO must certify the Spill Report using the CIWQS online reporting database. Amendments to the Spill Report may be made for up to 120 days following the conclusion of the SSO Response.

STEP 6: Within 45 Days after SSO end date/time

☐ Within 45 days after the SSO end date/time, submit an SSO Technical Report using the CIWQS online reporting database only if 50,000 gallons or more was spilled to surface waters.

This form completed by: _____ _____ _____

Name *Title* *Date*

© 2004-2014 DKF Solutions Group, LLC. All rights reserved.

Regulatory Notifications Packet

Category 2 & 3 SSO Reporting Checklist

A-2b

Use this Checklist for Category 2 and 3 SSOs only

STEP 1: Receive call from crew.

STEP 2: Submit Draft Spill Report (Category 2 only)

☐ Submit a Draft Spill Report using the CIWQS online reporting database within 3 days after awareness of Category 2 SSO.

STEP 3: Certify Spill Report

☐ Certify the Spill Report using the CIWQS online reporting database:
- Category 2 SSO: Within 15 days after the conclusion of the response
- Category 3 SSO: Within 30 days after the end of the calendar month in which the SSO occurred

☐ Updates to the Spill Report may be made for up to 120 days following the conclusion of the SSO Response.

This form completed by: _____ _____ _____

Name *Title* *Date*

© 2004-2014 DKF Solutions Group, LLC. All rights reserved.

Appendix B

SANITARY SEWER BACKUP RESPONSE PACKET

© 2004-2014 DKF Solutions Group, LLC. All rights reserved.

Sanitary Sewer Backup Response Packet
Table of Contents

Form	Form Number
Instructions and Chain of Custody	packet envelope
Backup Response Flowchart	B-1
Bubbled Toilets Letter	-2
First Responder Form	-3
Declination of Cleaning Services (3-copy NCR)	-4
Sewer Overflow Report	-5
Start Time Determination Form	-6
Volume Estimation Forms	-7a, -7b, -7c
Lateral TV Report	-8
Claims Submittal Checklist	-9
Collection System Failure Analysis Form	-10
Customer Service Packet	
Instructions	packet envelope
Customer Information	CS-1
Claim Form	-2
Sewer Spill Reference Guide	pamphlet
Regulatory Notifications Packet	
Instructions	envelope
Regulatory Reporting Guide	A-1
Category 1 SSO Reporting Checklist	-2a
Category 2 & 3 SSO Reporting Checklist	-2b
RWQCB Notification Fax	-3
Door Hanger	n/a

For pre-assembled packets contact DKF Solutions Group at (707) 373-9709 or losscontrol@sbcglobal.net

© 2004-2014 DKF Solutions Group All rights reserved.

In the event of a **Sewer Backup** into a home/business
READ THIS FIRST

If this is a Category 1 SSO greater than or equal to 1,000 gallons: contact CalOES at (800) 852-7550

Notifications Trigger:	Contact Immediately:	Telephone:
For all backups into/onto private property possibly due to problems in the public sewer	Chief Plant Operator	(707) 841-7911
	CalNorth Adjusters	(707) 539-7017 or (707) 292-1898 or (707) 288-1901
For any media requests	City Manager	(707) 459-4601

Procedures

Collections Crew:

- ❑ Follow the instructions on the Sewer Backup Response Flowchart (B-1). Note: If multiple dwelling units are affected, use one packet per unit and check here: ☐
- ❑ If indicated on the flowchart, give the customer the Bubbled Toilets Letter and/or the Customer Service Packet and have them initial here:
  Customer acknowledgement of receipt of Bubbled Toilets Letter: _____
  Customer acknowledgement of receipt of Customer Service Packet: _____
- ❑ Place completed forms in this envelope, complete the Chain of Custody record (right) and forward this packet to the Chief Plant Operator.

Print Name: _____

Initial: _____

Date: _____

Time: _____

Chief Plant Operator:

- ❑ Review the enclosed forms.
- ❑ Complete the Regulatory Notifications Packet.
- ❑ Complete the Claims Submittal Checklist.
- ❑ Complete the Chain of Custody record (right) and forward this packet to the Deputy City Clerk.

Print Name: _____

Initial: _____

Date: _____

Time: _____

Deputy City Clerk:

- ❑ Refer to the Claims Submittal Checklist.

© 2004-2014 DKF Solutions Group All rights reserved.

Sanitary Sewer Backup Response Packet
Backup Response Flowchart

B-1
Side A

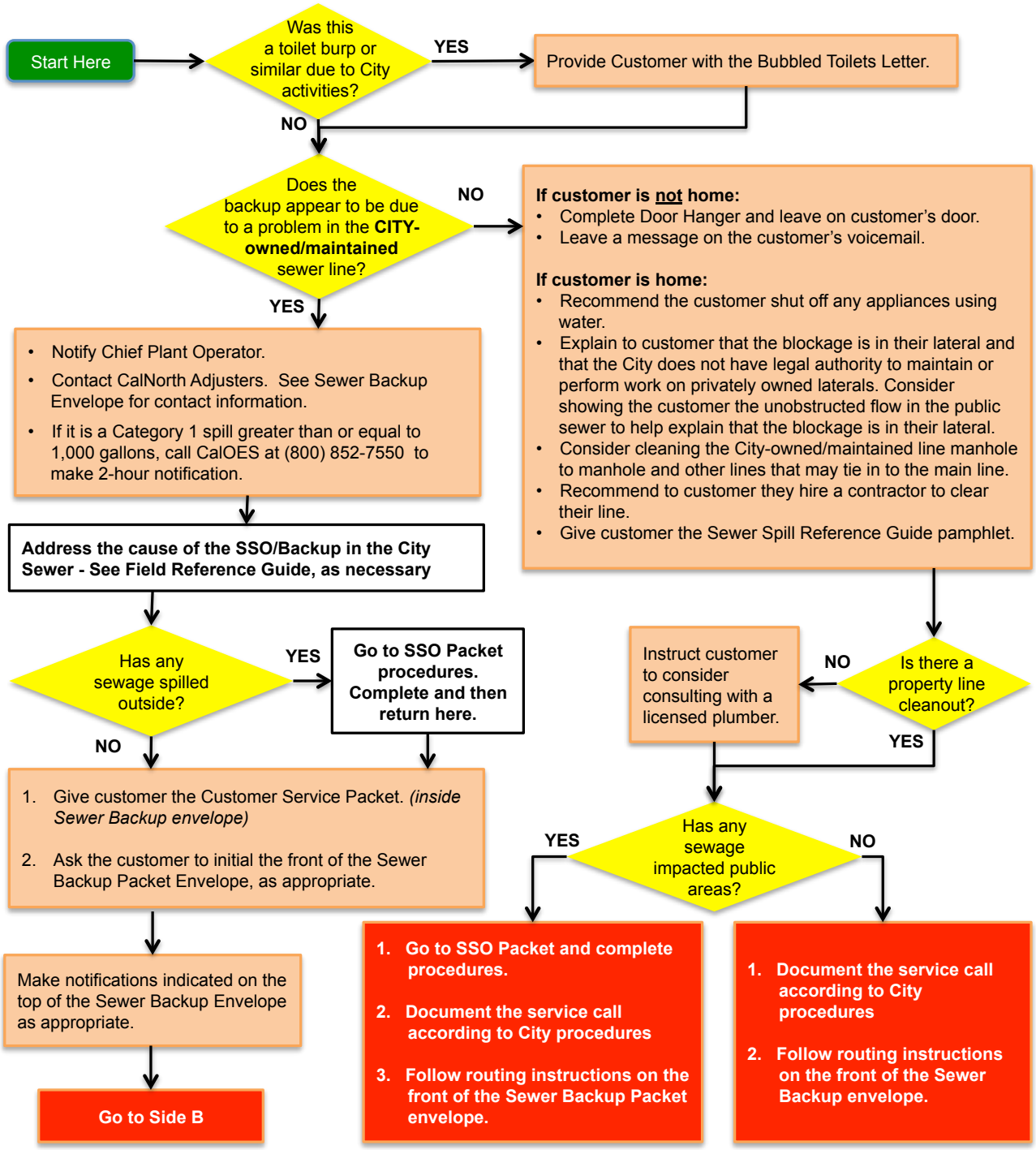

MEDIA AND PUBLIC RELATIONS GUIDELINES:

Exercise caution in contacts with the public or media when you respond to a spill. Any information you provide or statements you make may become pertinent in the event of possible court action, it is important to AVOID THE FOLLOWING:

- Giving out the wrong information,
- Making accusations against customers, businesses or other agencies
- Speculating about the situation you are responding to
- Providing incorrect facts about a company or other agency

Be courteous and attempt to provide accurate information to questions within the limits above. In some cases, it may be appropriate to say that we do not have any information, or to delay answering a question and then to say when an answer might be available.

In most cases, refer media requests to the media coordinator indicated on the front of the Sewer Overflow Packet envelope.

© 2004-2014 DKF Solutions Group All rights reserved.

Sanitary Sewer Backup Response Packet
Backup Response Flowchart

B-1
Side B

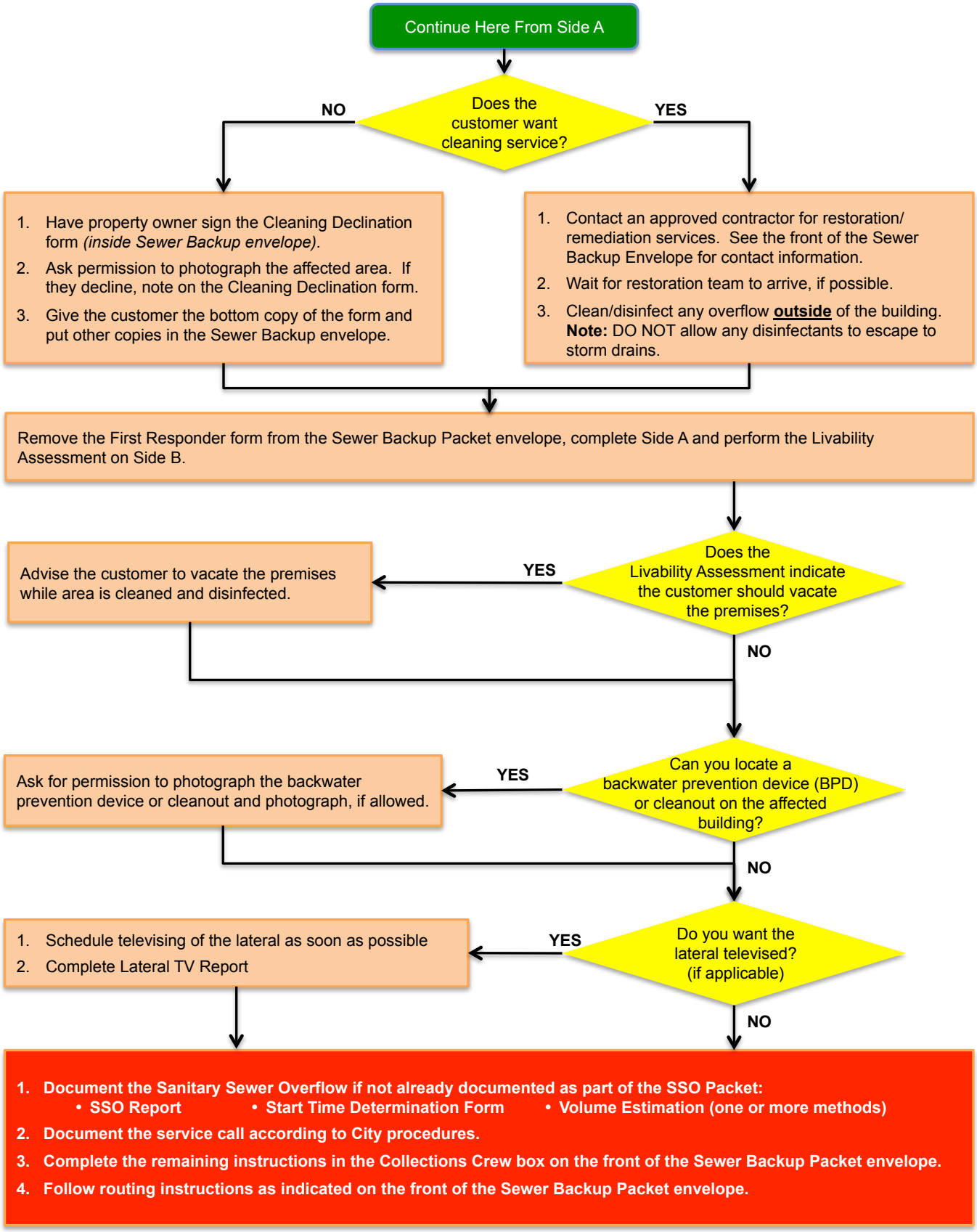

© 2004-2014 DKF Solutions Group All rights reserved.

Bubbled Toilets Letter

Dear City of Willits Customer,

Thank you for informing us that your toilet bubbled while our crews were working in proximity of your property. We apologize for the inconvenience and hope that this letter will answer some of your questions about bubbling toilets.

1. **Is this a health risk?**
   The water that came out of your toilet is potable water from the toilet bowl. Unless your toilet was in use when this occurred, this water is no different than that encountered while cleaning your toilet.

2. **What is the City doing in the street?**
   In order to insure reliable sewer service, the City inspects, cleans, and repairs its sewer system on a continuous basis.

3. **How does sewer cleaning cause my toilet to bubble?**
   Typical industry cleaning equipment uses high-pressure water to clean sewers. The first step is to use the high-pressure water jets to propel the hose and cleaning nozzle upstream as far as 800 feet. During this process, air within the main pipe is displaced and sometimes goes up the private lateral pipe and releases though the toilet. This can also happen during the cleaning phase, when high-pressure water is pulled downstream to the cleaning truck.

4. **What causes the air to come from my toilet?**
   Over the years, City crews have found that the bubbling of toilets have many causes, some of which are:
   - Obstructed vent pipes;
   - Vent pipes that are positioned too far from the toilet;
   - Lateral pipes that may be in use as the crew is cleaning (e.g. draining washing machine, draining bathtub, etc.);
   - Lateral pipes that may have obstructions that are causing them to hold water (e.g. roots, grease, etc.).

5. **What does City staff do, once informed of a bubbling toilet?**
   Once notified of a bubbling toilet, the crew leader explains to the customer what has happened, and checks to see if there is a clean-out in the customer's yard that could be opened in the future during cleaning. The crew leader then makes notes and completes paperwork that puts the address on the City's computerized notification list. In the future, crews will notice that this address was "bubbled" at one time, and, before commencing the cleaning, they will notify the occupant of the possibility of bubbling toilets. In the event the occupant is not present when the cleaning begins, the crews will attempt to open clean-outs and/or lower water pressure to avoid bubbling.

6. **What can I do to prevent my toilet from bubbling?**
   When a sewer begins to drain slowly, it may be a sign that it needs to be cleaned or repaired. Trees and shrubs may have root structures that are entering the lateral pipe. The homeowner needs to make sure to have a clean-out for accessing the line. It is the homeowner's responsibility to keep the sewer lateral pipe in good working condition.

It is always a good idea to keep the toilet lid down when not in use, and not install carpets in the bathroom unless they can be easily removed and cleaned. For more information please call the City Manager at (707) 459-4601.

Sincerely,

City of Willits

© 2004-2014 DKF Solutions Group All rights reserved.

Sanitary Sewer Backup Response Packet

Carta de Inodoros Burbujeados

B-2 Spanish

Estimado Cliente de la Ciudad de Willits:

Gracias por habernos informado que su lavabo burbujeó mientras que nuestros empleados estaban trabajando en proximidad a su propiedad. Le pedimos perdón por la inconveniencia y esperamos que esta carta le contestará algunas de sus preguntas acerca de inodoros burbujeantes.

1. **¿Es riesgo de salud esto?**
   El agua que salió de su inodoro es agua potable de la taza del inodoro. Menos que su inodoro estaba en uso cuando esto ocurrió, esa agua no es diferente de aquella encontrada mientras que limpia su inodoro.
2. **¿Qué está haciendo la Ciudad en la calle?**
   Para asegurar servicio de alcantarilla confiable, la Ciudad inspecciona, limpia, and repara su Sistema de alcantarillado en una forma continua.
3. **¿Cómo causa la limpieza de la alcantarilla que burbujee mi inodoro?**
   El equipamiento industrial de limpieza típico usa agua de alta presión para limpiar alcantarillas. La primer medida es de usar chorros de agua de alta presión para propulsar a la manguera y a la boquilla de limpieza contracorriente tan lejos como ochocientos (800) pies. Durante este proceso, el aire dentro la tubería principal es desplazada y a veces camina para arriba de la tubería lateral privada y se libera por el inodoro. Esto también puede ocurrir durante la fase de limpieza, cuando agua de alta presión es jalada corriente abajo al camión de limpieza.
4. **¿Qué causa al aire que venga de mi inodoro?**
   A lo largo de los años, los empleados de la Ciudad han encontrado que el burbujeo de inodoros tiene muchas causas, algunas de cuales son:
   - Tubería de ventilación obstruida;
   - Tubería de ventilación que está posicionada muy lejos del inodoro;
   - Tubería lateral que pueda estar en uso mientras que los empleados estén limpiando (por ej., vaciando la máquina de lavar, vaciando el baño, etcétera);
   - Tubería lateral que podrá tener obstrucciones que están causándola a contener agua (por ej., raíces, grasa, etcétera).
5. **¿Qué hace el personal de la Ciudad, una vez informados de un inodoro burbujeante?**
   Una vez notificado de un inodoro burbujeante, el líder de nuestros empleados le explica al cliente lo que ha ocurrido, y hace un chequeo para ver si hay una limpieza general en el patio del cliente que se pudiera abrir en el futuro durante la limpieza. El líder de personal luego toma apuntes y completa papeleo que pone a la dirección en la lista de notificación computarizada de la Ciudad. En el futuro, los empleados tomarán nota que hubo un tiempo en que esta dirección fue «burbujeada», y, antes de empezar la limpieza, ellos le avisarán al ocupante de la posibilidad de inodoros burbujeantes. En el evento que el ocupante no esté presente cuando la limpieza empiece, los empleados tratarán de abrir las limpiezas generales y/o rebajar la presión del agua para impedir la ocurrencia de burbujeo.
6. **¿Qué puede hacer para impedir a mi inodoro de burbujeando?**
   Cuando una alcantarilla empieza a desaguar lentamente, puede que sea un indicio que se necesita limpiar o reparar. Puede que los árboles y arbustos tengan estructuras de raíces que estén entrando a la tubería lateral. El dueño/la dueña de casa necesita asegurar de tener una limpieza general para acceder la línea. Es la responsabilidad del dueño/la dueña de mantener la tubería de alcantarilla lateral en buena condición operativa.

Siempre es buena idea de mantener la tapa del inodoro bajada cuando no esté el inodoro en uso, y no instalar alfombra en el cuarto de baño menos que esa se pueda quitar y limpiar. Para más información, por favor llame al Gerente de la Ciudad por medio del número de teléfono (707) 459-4601.

Atentamente,
La Ciudad de Willits

© 2004-2014 DKF Solutions Group All rights reserved.

Sanitary Sewer Backup Response Packet

First Responder Form

B-3
Side A

Fill out this form as completely as possible.
Ask customer if you may enter the home. If so, take photos of all damaged and undamaged areas.

PERSON COMPLETING THIS FORM: Name: _____ Title: _____	PHONE: DATE: TIME:
TIME STAFF ARRIVED ON-SITE:	
DID CUSTOMER CALL CLEANING CONTRACTOR? ☐ Yes ☐ No If YES, name of contractor:	
RESIDENT NAME: ☐ Owner ☐ Renter	IF RENT, PROPERTY MANAGER(S): OWNER:
STREET ADDRESS: CITY, STATE AND ZIP: PHONE:	STREET ADDRESS: CITY, STATE AND ZIP: PHONE:
Is nearest upstream manhole visibly higher than the drain/fixture that overflowed? ☐ Yes ☐ No	
# OF PEOPLE LIVING AT RESIDENCE:	

Approximate Age of Home:	# of Bathrooms:	# of Rooms Affected:
Approximate Amount of Spill (gallons):	Approximate Time Sewage Has Been Sitting (hrs/days):	

Numbers of Photographs or Videos Taken: ☐ Photographs ☐ Video	Where are photos/video stored?

Does property have a Property Line Cleanout or BPD?	☐ YES ☐ NO ☐ Unknown
If yes, was the Property Line Cleanout/BPD operational at the time of the overflow?	☐ YES ☐ NO ☐ Unknown
Have there ever been any previous spills at this location?	☐ YES ☐ NO ☐ Unknown
Has the resident had any plumbing work done recently? *If YES, please describe:*	☐ YES ☐ NO

GO TO SIDE B

© 2004-2014 DKF Solutions Group All rights reserved.

Sanitary Sewer Backup Response Packet

First Responder Form

B-3
Side B

LIVABILITY ASESSMENT

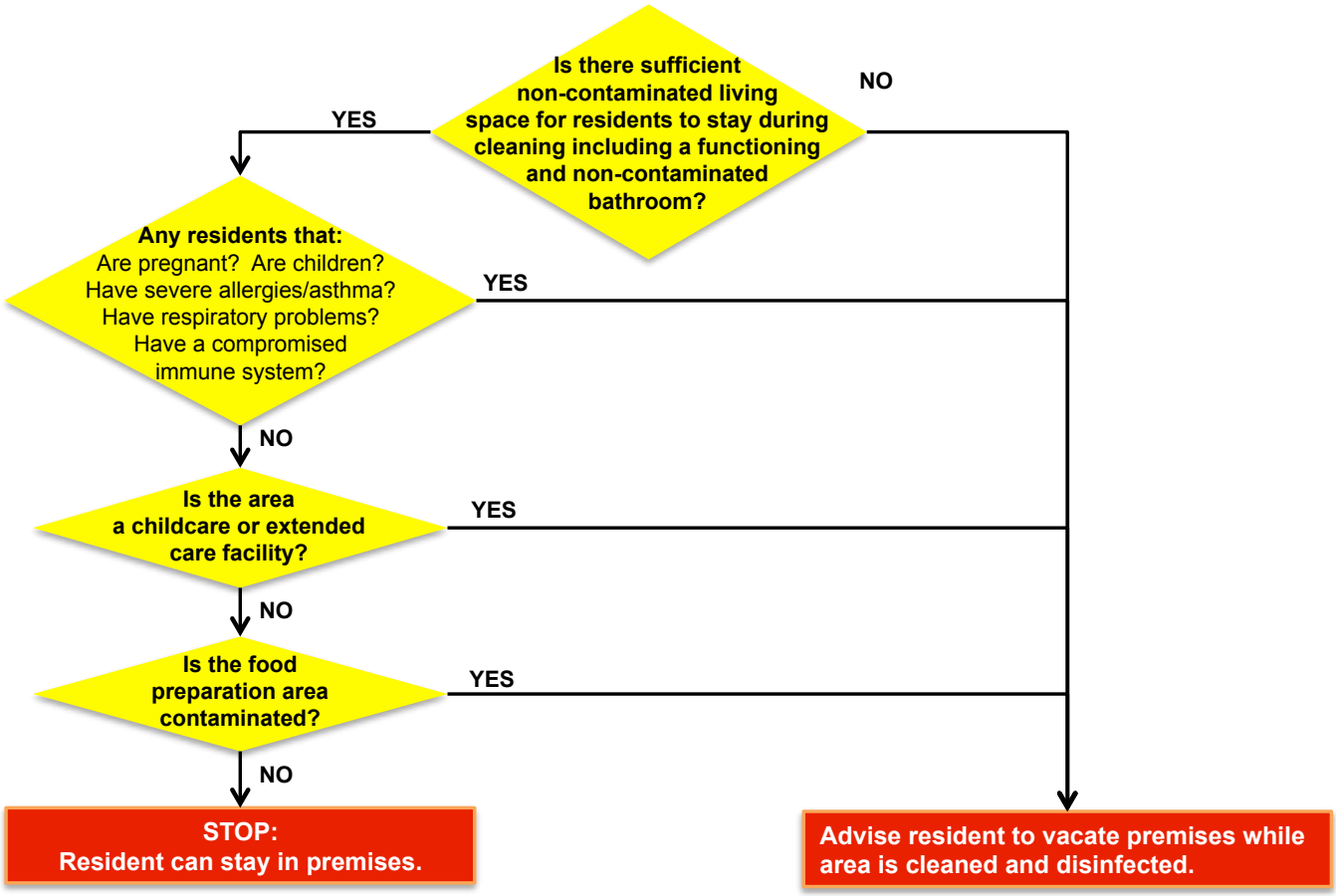

SANITARY SEWER LINE BLOCKAGE LOCATION

PLEASE CHECK THE BOXES THAT DESCRIBE YOUR OBSERVATIONS:

Customer Cleanout Was:	Public Cleanout was:
☐ Non-Existent	☐ Non-Existent
☐ Full	☐ Full
☐ Empty	☐ Empty

Recommended Follow-Up Action(s):

On the diagram below, indicate the location of the sewer line and where the problem occurred.

Affected House

Upstream House

Did sewage go under buildings? ☐ Yes ☐ No ☐ Unsure

Place completed form in Sewer Backup Envelope and follow routing instructions

© 2004-2014 DKF Solutions Group All rights reserved.

B-4

Sanitary Sewer Backup Response Packet
Declination of Sewage Cleaning Services

Customer Information		
NAME:	ADDRESS:	TELEPHONE:

ON (date)	**AT** (time)	**Approximately** (quantity)	**GALLONS OF:** ☐ Sewage ☐ Grey Water ☐ Toilet Bowl Water ☐ Odor ☐ Other (describe):

Overflowed from (or odor emanating from)
- ☐ Toilet
- ☐ Shower/Tub
- ☐ Washer
- ☐ Other (describe):

The overflow affected the following areas *(check one)*:
- ☐ Bathroom ☐ Bedroom
- ☐ Hallway ☐ Garage
- ☐ Kitchen ☐ Crawlspace
- ☐ Other (specify):

The overflow affected the following flooring:
- ☐ Tile ☐ Wood Flooring
- ☐ Linoleum ☐ Carpet
- ☐ Other (specify):

and/or additional materials:
- ☐ Area Rugs ☐ Towels
- ☐ Clothing ☐ Other (specify):

Were photos taken?: ☐ Yes ☐ No If yes, where are photos stored?

This Form Completed By: Name: _____ **Date:** _____
(Write legibly) Title: **Time:**

CUSTOMER, please read the following and sign below:
I/We acknowledge that City of Willits, CA (*City)* has offered to provide professional cleaning and decontamination services to remediate the sewage backup and/or overflow described above and that we declined the offer. We further understand and acknowledge that because we have declined, any necessary remediation activities will be conducted without City assistance, and that the City will not accept responsibility for work performed by persons other than those engaged by the City. The City will also not accept responsibility for any charges related to this incident that are not usual and customary. Please refer to the Customer Service Packet for whom to contact if you have any questions.

Customer Signature*:		**Date:**
The information above was explained to the customer by the following employee:	**Name:**	**Title:**
	Signature:	**Date:**

**Note to responders: if customer declines to sign this form, then have a co-worker sign here as a witness:*
Name: _____ *Signature:* _____ *Date:* _____

Recommendations to customer to clean up the spill:
- Keep pets and children out of the affected area
- Turn off heating/air conditioning systems
- Wear rubber boots, rubber gloves, and goggles during cleanup of the affected area.
- Remove and discard items that cannot be washed and disinfected (such as: mattresses, rugs, cosmetics, baby toys, etc.)
- Remove and discard drywall and insulation that has been contaminated with sewage or flood waters.
- Thoroughly clean all hard surfaces (such as flooring, concrete, molding, wood and metal furniture, countertops, appliances, sinks and other plumbing fixtures) with hot water and laundry or dish detergent.
- Help the drying process with fans, air conditioning units, and dehumidifiers.
- After completing cleanup, wash your hands with soap and water. Use water that has been boiled for 1 minute (allow water to cool before washing your hands.) OR use water that has been disinfected (solution of 1/8 teaspoon of household bleach per 1 gallon of water). Let it stand for 30 min. If water is cloudy, use ¼ teaspoon of household bleach per 1 gallon of water.
- Wash all clothes worn during the cleanup in hot water and detergent (wash separately from uncontaminated clothes).
- Wash clothes contaminated with flood or sewage water in hot water and detergent. Use a laundromat for washing large quantities of clothes and linens until your onsite wastewater system has been professionally inspected and serviced.
- Seek immediate attention if you become injured or ill.

Distribution Instructions – Top Copy to City records; Middle Copy to Chief Plant Operator; Bottom Copy to Customer

© 2004-2014 DKF Solutions Group All rights reserved.

Sanitary Sewer Backup Response Packet

Sanitary Sewer Overflow Report

B-5
Side A

INSTRUCTIONS: Complete all items *EXCEPT* those that are shaded gray

SSO Category *(check one)*:

☐ Category 1: Discharge of untreated or partially treated wastewater of any volume resulting from a sanitary sewer system failure or flow condition that either (1) Reaches surface water and/or drainage channel tributary to a surface water; OR (2) Reached a Municipal Separate Storm Sewer System (MS4) and was not fully captured and returned to the sanitary sewer system or otherwise captured and disposed of properly.

☐ Category 2: Discharge of untreated or partially treated wastewater greater than or equal to 1,000 gallons resulting from a sanitary sewer system failure or flow condition that either (1) Does not reach surface water, a drainage channel, or an MS4, OR (2) The entire SSO discharged to the storm drain system was fully recovered and disposed of properly.

☐ Category 3: All other discharges of untreated or partially treated wastewater resulting from a sanitary sewer system failure or flow condition

☐ Private Lateral Sewage Discharge (specify): ☐ Single Family Home ☐ Multi-Family Home ☐ High Density Residential (5+ units) ☐ Food Service Establishment (FSE) ☐ Mixed Use Property ☐ Industrial Property ☐ Commercial Property ☐ Public quasi-public institution (hospital, schools, fire department, etc.)

IMMEDIATE NOTIFICATION: If this is a Category 1 SSO ≥1,000 gallons, contact CalOES within 2 hours at (800) 852-7550.

A. SSO LOCATION

SSO Location Name:		
Latitude Coordinates*:	Longitude Coordinates:	
Street Name and Number:		
Nearest Cross Street:	City:	Zip Code:
County:	SSO Location Description:	

B. SSO DESCRIPTION (Complete Volume Estimation Worksheets and/or refer to Field Guide as needed for estimations.)

SSO Appearance Point (check one or more): ☐ Combined Sewer D.I. (Combined CS Only) ☐ Force Main ☐ Gravity Mainline ☐ Lateral Cleanout (Private) ☐ Lateral Cleanout (Public) ☐ Inside Building or Structure ☐ Manhole ☐ Pump Station ☐ Lower Lateral (Private) ☐ Lower Lateral (Public) ☐ Upper Lateral (Private) ☐ Upper Lateral (Public) ☐ Other Sewer System Structure (specify):

Were there multiple appearance points? ☐ No ☐ Yes, number of appearance points:

Did the SSO reach a drainage channel and/or surface water? ☐ Yes (*Category 1)* ☐No

If the SSO reached a storm sewer, was it fully captured and returned to the Sanitary Sewer? ☐ Yes ☐No (*Category 1)*

Was this spill from a private lateral? ☐ Yes ☐No If YES, name of responsible party:

Final Spill Destination: ☐ Ocean/ocean beach* ☐ Surface waters other than ocean ☐ Drainage channel ☐ Building/structure ☐ Separate Storm drain ☐ Combined storm drain ☐ Paved surface ☐ Unpaved surface ☐ Street/curb/gutter ☐ Other:
*Provide name(s) of affected drainage channels, beach, etc.:

Total Estimated SSO volume *(in gallons – 1,000gal or more = Category 1)*: gallons

Est. volume that reached a separate storm drain that flows to a surface water body:	gal	Recovered:	gal
Est. volume that reached a drainage channel that flows to a surface water body:	gal	Recovered:	gal
Est. volume discharged directly to a surface water body:	gal	Recovered:	gal
Est. volume discharged to land:	gal	Recovered:	gal

Calc. Methods: ☐Eyeball ☐Photo Comparison ☐Upstream Lat. Connections ☐Area/Volume (include sketch/photo with dimensions) ☐Other (describe):

C. SSO OCCURRING TIME (complete Start Time Determination Form and then complete information below)

Estimated SSO start date:	Estimated SSO start time:
Date SSO reported to sewer crew:	Time SSO reported to sewer crew:
Date sewer crew arrived:	Time sewer crew arrived:
Who was interviewed to help determine start time?	
Estimated SSO end date:	Estimated SSO end time:

* If multiple appearance points, use the GPS coordinates for the location of the SSO appearance point closest to the failure point/blockage.

© 2004-2014 DKF Solutions Group All rights reserved.

Sanitary Sewer Backup Response Packet

Sanitary Sewer Overflow Report

B-5
Side B

D. CAUSE OF SSO

Where did failure occur? (Check all that apply): ☐ Air Relief or Blow-Off Valve ☐ Force Main ☐ Gravity Mainline ☐ Siphon
☐ Lower Lateral (public) ☐ Lower Lateral (private) ☐ Manhole ☐ Pump Station (specify): ○Controls ○Mechanical ○Power
☐ Upper Lateral (public) ☐ Upper Lateral (private) Other:

SSO cause *(check all that apply)*: ☐ Air Relief or Blow-Off Valve Failure ☐ Construction Diversion Failure ☐ CS Maintenance
☐ Damage by others ☐ Debris (specify): ○from Construction ○from Lateral ○General ○Rags ☐ Flow Exceeded Capacity
☐ FROG (Fats, roots, oil, grease) ☐ Inappropriate Discharge ☐ Natural Disaster ☐ Operator Error ☐ Root Intrusion
☐ Pipe Structural Problem/Failure ☐ Pipe Structural Problem/Failure (Installation) ☐ Rainfall Exceeded Design
☐ Pump Station Failure (specify): ○Controls ○Mechanical ○Power ☐ Siphon Failure ☐ Vandalism
☐ Surcharged Pipe ☐ Non - Dispersible Wipes ☐ Other (specify):

Diameter (in inches) of pipe at point of blockage/spill cause (if applicable):

Sewer pipe material at point of blockage/spill cause (if applicable):

Estimated age of sewer asset at the point of blockage or failure (if applicable):

Description of terrain surrounding point of blockage/spill cause: ☐ Flat ☐ Mixed ☐ Steep

E. SSO RESPONSE

SSO response activities (check all that apply): ☐ Cleaned-Up ☐ Mitigated Effects of Spill ☐ Contained All or Portion of Spill
☐ Restored Flow ☐ Returned All Spill to Sanitary Sewer System ☐ Returned Portion of Spill to Sanitary Sewer System
☐ Property Owner Notified ☐ Other Enforcement Agency Notified (specify) ☐ Other (specify):

SSO response completed (date & time):

Visual inspection result of impacted waters (if applicable):

Any fish killed? ☐ Yes ☐ No Any ongoing investigation? ☐ Yes ☐ No

Were health warnings posted? ☐ Yes ☐ No If yes, provide health warning/beach closure posting/details:

Was there a beach closure? ☐ Yes ☐ No If yes, name of closed beach(es):

Were samples of impacted waters collected? ☐ Yes ☐ No
If YES, select the analyses: ☐ DO ☐ Ammonia ☐ Bacteria ☐ pH ☐ Temperature ☐ Other:

Recommended corrective actions: (check all that apply and provide detail)
☐ Add sewer to preventive maintenance program
☐ Adjust schedule/method of preventive maintenance
☐ Enforcement action against FROG source
☐ Inspect Sewer Using CCTV to Determine Cause
☐ Plan rehabilitation or replacement of sewer
☐ Repair Facilities or Replace Defect
☐ Other (specify)

What major equipment was used in the response?

List all agency personnel involved in the response including name, title and their role in the response:

F. NOTES

G. NOTIFICATION DETAILS

CalOES contacted date and time (if applicable):

CalOES Control Number (if applicable): Spoke to:

This form prepared by: NAME:	TITLE:	DATE:
This form reviewed by: NAME:	TITLE:	DATE:

Place completed form in Sewer Backup Envelope and follow routing instructions.

© 2004-2014 DKF Solutions Group All rights reserved.

Sanitary Sewer Backup Response Packet

Start Time Determination Form

B-6

SSO Start Date: _____ Location: _____

Accurate start time determination is an essential part of SSO volume estimation. Depending on the flow rate, being even one minute off can have a huge impact on the volume estimation. Be as precise as possible. Do not round to quarter hour increments. Start time must be based on all available information (interviews with neighbors, emergency responders, etc.)

What time was the City notified of the SSO? _____ □ AM □ PM

Who notified the City? _____

Did they indicate what time they noticed the SSO? □ YES □ NO If yes, what time? _____ □ AM □ PM

Who at the City received the notification? _____

What time did the crew arrive at the site of the SSO? _____ □ AM □ PM

Who was interviewed regarding the start time of the SSO? Include their name, contact information, and the statement they provided:

Name	Contact Information	Statement

Describe in detail how you determined the start time for this particular SSO:

SSO Start Date: _____ SSO Start Time: _____ □ AM □ PM

SSO End Date: _____ SSO End Time: _____ □ AM □ PM

SSO Duration: _____ **minutes**

This form completed by:

Name: _____ Signature: _____

Job Title: _____ Date: _____

© 2004-2014 DKF Solutions Group All rights reserved.

Sanitary Sewer Backup Response Packet

Volume Estimation: Eyeball Estimation Method

B-7a

Use this method only for small SSOs of less than 200 gallons.

SSO Date: _____ Location: _____

STEP 1: Position yourself so that you have a vantage point where you can see the entire SSO.

STEP 2: Imagine one or more buckets or barrels of water tipped over. Depending on the size of the SSO, select a bucket or barrel size as a frame of reference. It may be necessary to use more than one bucket/barrel size.

STEP 3: Estimate how many of each size bucket or barrel it would take to make an equivalent spill. Enter those numbers in Column A of the row in the table below that corresponds to the bucket/barrel sizes you are using as a frame of reference.

STEP 4: Multiply the number in Column A by the multiplier in Column B. Enter the result in Column C.

	A	B	C
Size of bucket(s) or barrel(s)	**How many of this size?**	**Multiplier**	**Estimated SSO Volume (gallons)**
1 gallon water jug		x 1 gallons	
5 gallon bucket		x 5 gallons	
32 gallon trash can		x 32 gallons	
55 gallon drum		x 55 gallons	
Other: _____ gallons		x _____ gallons	
		Estimated Total SSO Volume:	

STEP 5: Is rainfall a factor in the SSO? ☐Yes ☐No

If yes, what volume of the observed spill volume do you estimate is rainfall? _____ gallons

If yes, describe how you determined the amount of rainfall in the observed spill?

STEP 6: Calculate the estimated SSO volume by subtracting the rainfall from the SSO volume:

_____ gallons − _____ gallons = _____ gallons

Estimated SSO Volume — Rainfall — **Total Estimated SSO Volume**

Do you believe that this method has estimated the entire SSO? ☐Yes ☐No

If no, you MUST use additional methods to estimate the entire SSO. If yes, it is advisable to use additional methods to support the estimation. Explain why you believe this method has/has not estimated the entire SSO:

This worksheet completed by:

Name: _____ Signature: _____

Job Title: _____ Date: _____

© 2004-2014 DKF Solutions Group All rights reserved.

Sanitary Sewer Backup Response Packet

Volume Estimation: Duration and Flow Rate Comparison Method

B-7b
Side 1

SSO Date: _____ Location: _____

STEP 1: Compare the SSO to reference images on Side 2 to estimate flow rate of the current overflow. Describe which reference photo(s) were used and any additional factors that influenced applying the reference photo data to the actual SSO:

Flow Rate Based on Photo Comparison: _____gallons per minute (gpm)

STEP 2: Complete the **Start Time Determination Form** to provide a detailed description of how start time was determined. Copy the SSO Duration from the Start Time Determination Form here:

SSO Duration: _____minutes

STEP 3: Multiply the flow rate by the SSO duration to calculate the estimated SSO volume.

_____gpm	X	_____minutes	=	_____gallons
Flow Rate		SSO Duration		Estimated SSO Volume

STEP 4: Did the SSO occur during a period of consistent flow in this portion of the system? ☐Yes ☐ No

If no, explain how, based on this portion of the collection system and its users, you believe it may have impacted the estimated SSO volume:

By what percentage are you adjusting the estimation? ☐ increase ☐ decrease _____%

Translate the percentage into gallons: _____gallons

STEP 5: Calculate the adjusted SSO volume estimate:

_____gallons	+ or -	_____gallons	=	_____gallons
Estimated SSO Volume		Adjustment		**Estimated SSO volume**

Do you believe that this method has estimated the entire SSO? ☐Yes ☐No

If no, you MUST use additional methods to estimate the entire SSO. If yes, it is advisable to use additional methods to support the estimation. Explain why you believe this method has/has not estimated the entire SSO:

This worksheet completed by:

Name: _____ Signature: _____

Job Title: _____ Date: _____

© 2004-2014 DKF Solutions Group All rights reserved.

IMPORTANT NOTE:
These photographs are provided as examples only and will change with many factors.

SSCSC Manhole Overflow Gauge

CWEA Southern Section Collections Systems Committee
Overflow Simulation courtesy of Eastern Municipal Water District

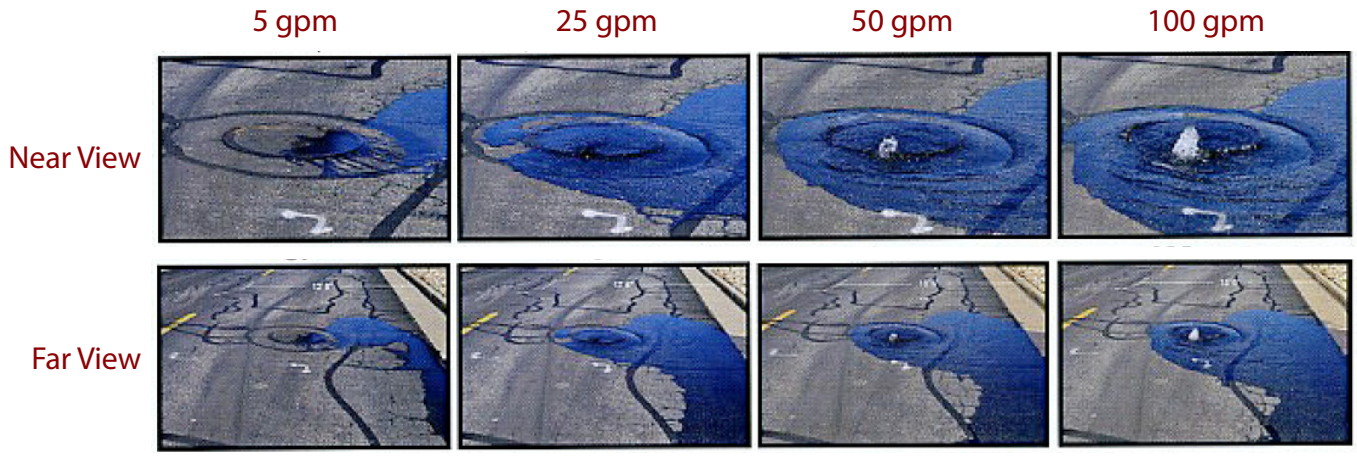

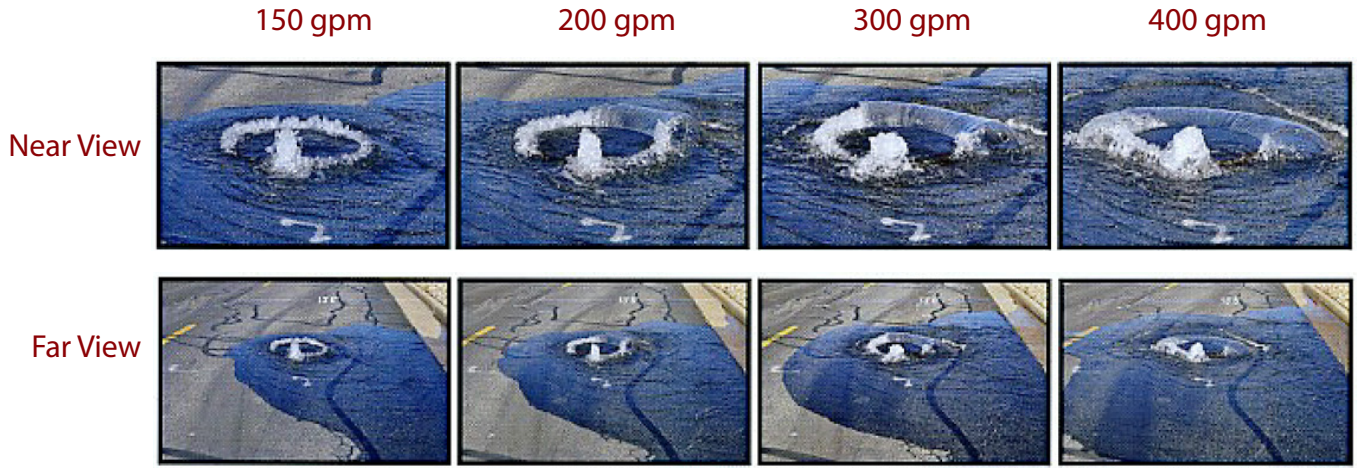

© 2004-2014 DKF Solutions Group All rights reserved.

Sanitary Sewer Backup Response Packet

Volume Estimation: Upstream Lateral Connections Method

B-7c

SSO Date: _____ Location: _____

STEP 1: Determine the number of Equivalent Dwelling Units (EDUs) for this SSO: _____ EDUs
NOTE: A single-family residential home = 1 EDU. For commercial buildings, refer to agency documentation.

STEP 2: This volume estimation method utilizes daily usage data based on flow rate studies of several jurisdictions in California. Column A shows how an average daily of usage of 180 gallons per day is distributed during each 6-hour period. Adjust the table as necessary to accurately represent the actual data.

Complete Column E by entering the number of minutes the SSO was active during each 6-hour time period. Multiply column D times Column E to calculate the gallons spilled during each time period. Add the numbers in Column F together for the Total Estimated SSO Volume per EDU.

	Flow Rate Per EDU				**SSO**	
	A	**B**	**C**	**D**	**E**	**F**
Time Period	Gallons per Period	Hours per period	A÷B = Gallons per Hour	C÷60 = Gallons per Hour	Minutes SSO was active during period	D × E = Gallons spilled per period
6am-noon	72	6	12	0.20		
noon-6pm	36	6	6	0.10		
6pm-midnight	54	6	9	0.15		
midnight-6am	18	6	3	0.05		
Total Estimated SSO Volume per EDU:						

STEP 3: Multiply the Estimated SSO Volume per EDU from Step 2 by the number of EDUs from Step 1.
_____gallons X _____ = _____gallons
Volume per EDU # of EDUs Estimated SSO Volume

STEP 4: Adjust SSO volume as necessary considering other factors, such as activity that would cause a fluctuating flow rate (doing laundry, taking showers, etc.). Explain rationale below and indicate adjusted SSO estimate (attach a separate page if necessary):

Estimated SSO Volume: _____gallons

Do you believe that this method has estimated the entire SSO? ☐Yes ☐No
If no, you MUST use additional methods to estimate the entire SSO. If yes, it is advisable to use additional methods to support the estimation. Explain why you believe this method has/has not estimated the entire SSO:

This worksheet completed by:
Name: _____ Signature: _____
Job Title: _____ Date: _____

© 2004-2014 DKF Solutions Group All rights reserved.

Sanitary Sewer Backup Response Packet

Lateral TV Report

B-8

PLEASE COMPLETE AS THOROUGHLY AS POSSIBLE

PERSON COMPLETING THIS FORM:

DATE:
PHONE:

CAMERA TYPE:

LOCATION OF CAMERA ENTRY:

AFFECTED PROPERTY STREET ADDRESS:

LOCATION OF CAMERA STOP:

CITY, STATE AND ZIP:

DESCRIBE AREA TV'd:

PHONE

UPSTREAM MANHOLE #:

WEATHER AT TIME OF CCTV WORK:

PLEASE CHECK ALL THAT WERE DISCOVERED – *Describe Extent & Location Using Camera Entry Point As Reference*:

- ❒ Broken Lateral – Describe:
  Depth:
- ❒ Roots – Severity: ☐ Light ☐ Moderate ☐ Heavy
- ❒ Grease – Severity: ☐ Light ☐ Moderate ☐ Heavy
- ❒ Sag – Describe:
  Depth:
- ❒ BPD – Describe:
  Location:
- ❒ Cleanout – Describe:
  Location:
- ❒ Joint/Junction – Describe:
  Depth
- ❒ Grade – Describe:
- ❒ Grit – Severity: ☐ Light ☐ Moderate ☐ Heavy
- ❒ Other – Describe:

TIME OF OVERFLOW:

TIME BLOCKAGE RELIEVED:

TIME LATERAL TV'd:

DEPTH OF LATERAL:

RECOMMENDED
FOLLOW UP WORK ACTIONS:

Mark for USA location? ☐ Yes ☐ No

Lateral Locations Marked in Green Paint? ☐ Yes ☐ No

SIGNATURE OF EMPLOYEE PERFORMING TV WORK:

DATE

If applicable, place completed form in Sewer Backup Packet and follow routing instructions.

© 2004-2014 DKF Solutions Group All rights reserved.

Sanitary Sewer Backup Response Packet

Claims Submittal Checklist

B-9

Chief Plant Operator

1. **Complete the following information:**

   Title: _____

   Name: _____

   Phone: _____

   Today's Date: _____

2. **Copy the items listed below and retain originals for internal archiving purposes.**

3. **Place the copies in the Backup Response Envelope and forward to the City Attorney's office:**

   - ☐ **Form B-3: First Responder Form**
   - ☐ **Form B-4: Declination of Cleaning Services**
   - ☐ **Form B-5: Sanitary Sewer Overflow Report**
   - ☐ **Form B-6: Start Time Determination Form**
   - ☐ **Form B-7: Volume Estimation Forms (a, b and/or c)**
   - ☐ **Form B-8: Lateral TV Report**
   - ☐ **Form B-9: Claims Submittal Checklist** *(this form)*
   - ☐ **All photos taken: Check here if digital photographs will be forwarded separately** ☐
   - ☐ **Any other information you feel is important in this claim**

4. **Go to Regulatory Notifications Packet and make all appropriate notifications.**

5. **Complete Form B-10: Collection System Failure Analysis**

Deputy City Clerk

1. **Verify claims packet is complete.**
2. **Forward to:**

   CalNorth Adjusters
   122 Calistoga Road #246
   Santa Rosa CA 95409
   Telephone: (707) 539-7785
   Fax: (707) 539-7691
   Email: calnorth@att.net

© 2004-2014 DKF Solutions Group All rights reserved.

Sanitary Sewer Backup Response Packet

Collection System Failure Analysis

B-10
Side A

To be completed by the Chief Plant Operator

Incident Report #		Prepared By	
SSO/Backup Information			
Event Date/Time	Address		
Volume Spilled	Volume Recovered		
Cause			
Summary of Historical SSOs/Backups/Service Calls/Other Problems			
Date	Cause	Date Last Cleaned	Crew
Records Reviewed By:		Record Review Date:	
Summary of CCTV Information			
CCTV Inspection Date		Tape Name/Number	
CCTV Tape Reviewed By		CCTV Review Date	
Observations			

Go to Side B

© 2004-2014 DKF Solutions Group All rights reserved.

Recommendations					
✓	Type	Specific Actions	Who is Responsible?	Completion Deadline	Who Will Verify Completion?
	No Changes or Repairs Required	n/a	n/a	n/a	n/a
	Repair(s)				
	Construction				
	Capital Improvement(s)				
	Change(s) to Maintenance Procedures				
	Change(s) to Overflow Response Procedures				
	Training				
	Misc.				
Comments/Notes:					
Review Date:					

© 2004-2014 DKF Solutions Group All rights reserved.

City of Willits CA
Overflow Emergency Response Plan

Customer Service Packet

Contents:

Form	Form Number
Customer Information Letter	CS-1
Claim Form	-2
Sewer Spill Reference Guide	pamphlet

Instructions:

1. Review the Customer Information letter to determine actions that need to be taken immediately.
2. See the Customer Information letter for information about filing a claim.
3. Review the Sewer Spill Reference Guide pamphlet.

If you have any questions contact:

Regarding Sewer Issues: City Manager at (707) 459-4601
Regarding Submitting a Claim for Damages: Deputy City Clerk at (707) 459-4601

This packet provided by: _____ **Phone:** _____

Paquete de Servicio de Atención al Cliente

Contenido:

Formulario	Número de formulario
Carta de Información al Cliente	CS-1
Formulario de Demanda	-2
Guía de Referencia para Derrame de Alcantarilla	Folleto

Instrucciones:

1. Repasé la Carta de Información al Cliente para determinar las acciones que se necesitan que llevar a cabo inmediatamente.
2. Lea la Carta de Información para el Cliente que explica como presentar una demanda.
3. Repasé el Folleto-Guía de Referencia para Derrame de Alcantarilla.

Si usted tiene cualquier pregunta, llame:

- Acerca de Asuntos de Alcantarillado: Llame al Gerents de la Ciudad al número (707) 459-4601
- Acerca de Presentando una Demanda para Daños y Perjuicios: a la Secretaria Municipal Adjunto al número (707) 459-4601

Print on 6” x 9” envelope

© 2004-2014 DKF Solutions Group, LLC. All rights reserved.

Sanitary Sewer Backup Response Packet

Customer Information Regarding Sewer Backup Claims

CS-1

Dear Resident:

We recognize that sewer back flow incidents can be stressful and require immediate response when all facts concerning how an incident occurred are unknown. Rest assured that we do all we can to prevent this type of event from occurring. Nevertheless, occasionally tree roots or other debris in the sewer lines cause a backup into homes immediately upstream of the blockage. At this time the City is investigating the cause of this incident.

If the City is found to be responsible for the incident, we are committed to cleaning and restoring your property, and to protecting the health of those affected during the remediation process.

The cleaning contractor provided by the City has been selected because of their adherence to established protocols that are designed to assure all parties thorough, cost-effective and expeditious cleaning services. You also have the right to select your own cleaning contractor, but the City does not guarantee payment of fees/expenses incurred and reserves the right to dispute fees/expenses deemed not usual and customary.

If you wish to discuss this matter, please contact the City Manager at (707) 459-4601. If you wish to submit a claim for damages, please contact the Deputy City Clerk at (707) 459-4601 for instructions on how to obtain a City Claim Form and to receive instructions on claims filing procedures. Completed Claims Forms are to be submitted to the Deputy City Clerk at 111 East Commercial Street, Willits, CA 95490.

Claims against the City must comply with the California Government Code Sec. 910-913.2. The Deputy City Clerk has the responsibility for processing any claims for damages that are submitted and can be reached at (707) 459-4601.

What you need to do now:

The City has prepared this brief set of instructions to help you minimize the impact of the loss by responding promptly to the situation.

- Do not attempt to clean the area yourself; let the cleaning and restoration company handle this.
- Keep people and pets away from the affected area(s).
- Turn off all appliances that use water.
- Turn off heating/air conditioning systems.
- Do not remove items from the area – the cleaning and restoration company will handle this.
- If you had recent plumbing work, contact your plumber or contractor and inform them of this incident.
- If you intend to file a claim, do so as soon as practical in order to have your claim considered. To obtain a claim form contact the Deputy City Clerk at (707) 459-4601.
    - **Please Note:** The general provisions for the filing of claims against public entities are contained in Part 3 (*commencing at Section 900)* of Division 3.6 of the Government code. Certain claims are not governed by these provisions, including tax and assessment matters, liens, employee compensations, workers' compensation, unemployment compensation, welfare, securities, and others.
    - The form and contents of a claim are specified by Section 910, et seq. A claim relating to a cause of action for death or for injury to person or to personal property or growing crops shall be presented not later than six months after accrual of the cause of action; other claims shall be presented within one year (*Section 911.2).*
    - Claims are to be presented by delivery or mailing to Deputy City Clerk, Willits, CA *(Section 915).*
    - It is suggested that the claimant refer to claims law and be fully advised with respect to the exceptions and further provisions contained therein.

Important Legal Notice: For your protection, read carefully, obtain a reliable translation, and/or consult your attorney.

Noticia Legal Importante: Para su proteccion lea usted con cuidado debe de obtener una translacion que sea punctual y de confianza o consulte con su abogado.

© 2004-2014 DKF Solutions Group, LLC. All rights reserved.

Paquete de Respuesta a Desbordamiento de Alcantarilla Sanitaria
Información de Cliente Acerca de Demandas de Desbordamiento de Alcantarilla

CS-1

Estimado Residente:

Nosotros reconocemos que los incidentes de pueden ser estresante y requieren respuesta inmediata cuando los hechos acerca de cómo un incidente ocurrió son desconocidos. Tenga por seguro que nosotros hacemos todo lo que podemos hacer para impedir este tipo de evento de ocurrir. Sin embargo, de vez en cuando las raíces de los árboles u otra basura en las líneas de la alcantarilla causan un desbordamiento para dentro de hogares situados inmediatamente contracorriente del bloqueo. A este tiempo la Ciudad está investigando la causa de este incidente.

Si la Ciudad es encontrada ser responsable por el incidente, nosotros estaremos comprometidos a limpiar y restaurar su propiedad, y a proteger la salud de aquellos quienes fueron afectados durante el proceso de remedio.

El contratista de limpieza proveída de parte de la Ciudad ha sido escogido debido a su adherencia de establecer protocolos que son diseñados para asegurar a todos los partes con servicios de limpieza completos, económicos, y expeditivos. Usted también tiene el derecho to escoger su propio contratista de limpieza, pero la Ciudad no garantiza pago de tarifas/gastos incurridos y reserva el derecho de disputar las tarifas/gastos considerados no ser usuales o de costumbre.

Si usted desea discutir este asunto, por favor de ponerse en contacto con el Gerents de la Ciudad por medio del número de teléfono (707) 459-4601. Si usted desea presentar una demanda para daños y perjuicios, por favor póngase en contacto con la Secretaria Municipal Adjunto al número (707) 459-4601 para instrucciones de cómo obtener un Formulario de la Ciudad para Demanda, y para recibir instrucciones acerca de los procedimientos para presentar demandas. Los Formularios de Demanda Completados serán sometidos a la Secretaria Municipal Adjunto, situada en 111 East Commercial Street, Willits, CA 95490.

Las reclamas contra la Ciudad tienen que cumplir con la Sección 910-913.2 del Código del Gobierno del Estado de California. La Secretaria Municipal Adjunto tiene la responsabilidad de procesar cualesquiera demandas por daños y perjuicios que sean sometidas y se puede contactar por medio del número de teléfono (707) 459-4601.

Lo Que Usted Necesita Hacer Inmediatamente:

La Ciudad ha preparado este juego de instrucciones breve para ayudarle a usted a minimizar el efecto de la pérdida por medio de respondiendo rápidamente a la situación.

- No intenta de limpiar el área usted mismo; permita que la compañía de limpieza y restauración maneje esto.
- Mantenga a las personas y a las mascotas lejos de la(s) área(s) afectada(s).ú
- Apagué todos los electrodomésticos que usan agua.
- Apagué todos los sistemas de calefacción y aire acondicionado.
- No remueva artículos del área—la compañía de limpieza y restauración manejará esto.
- Si usted ha tenido trabajo de plomería llevado a cabo recientemente, póngase en contacto con su plomero u contratista para avisarles de este incidente.
- Si usted tiene la intención de presentar una demanda, hágalo tan pronto como sea práctico para que se le considere su demanda. Para obtener un formulario de demanda, póngase en contacto con la Secretaria Municipal Adjunto por medio del número de teléfono (707) 459-4601.
    - **Favor de Notar:** Las provisiones generales para presentar demandas contra entidades públicas están contenidas en la Parte 3 (empezando en la Sección 900) de la División 3.6 del Código de Gobierno. Ciertas demandas no son gobernadas por estas provisiones, incluyendo asuntos de impuestos y valoraciones, gravámenes, compensación de empleados, compensación de trabajadores, subsidio por incapacidad laboral, beneficios sociales, títulos valores, y otros.
    - La forma y el contenido de una demanda son especificados por la Sección 910 y subsiguientes. Una demanda relacionada a un derecho de acción por muerte o por lesión a persona u a propiedad privada, o cosechas en pie será presentada no más tarde que seis (6) meses después de acrecimiento de la causa de acción; otras demandas serán presentadas dentro de un (1) año (Sección 911.2).
    - Las demandas serán presentadas por medio de entrega o correo a Secretaria Municipal Adjunto, Willits, CA 94519. *(Sección 915).*
    - Se recomienda que el demandante se refiera a las leyes de demandas y que sea completamente aconsejado con respecto a las excepciones y estipulaciones adicionales contenidas dentro de esas.

Noticia Legal Importante: Para su protección lea cuidadosamente, obtenga una traducción confiable, y/o consulte con su abogado.

© 2004-2014 DKF Solutions Group, LLC. All rights reserved.

CLAIM FOR MONEY OR DAMAGES AGAINST THE CITY OF WILLITS

RESERVED FOR FILING STAMP

CLAIM NO._____

File With:
City of Willits
111 E Commercial Street
Willits, CA 95490

A claim must be presented, as prescribed by the Government Code of the State of California, by the claimant or a person acting on his/her behalf and shall show the following:

If additional space is needed to provide your information, please attach sheets, identifying the paragraphs being answered.

1. Name and Post Office address of the Claimant:
   Name of Claimant: _____
   Post Office Address: _____
   _____
   _____

2. Post Office address to which the person presenting the claim desires notices to be sent:
   Name of Addressee: _____ Telephone: _____
   Post Office Address: _____
   _____
   _____

3. The date, place and other circumstances of the occurrence or transaction which gave rise to the claim asserted.
   Date of Occurrence: _____ Time of Occurrence: _____
   Location: _____
   Circumstances giving rise to this claim: _____
   _____
   _____
   _____
   _____
   _____

4. General description of the indebtedness, obligation, injury, damage or loss incurred so far as it may be known at the time of the presentation of the claim:
   _____
   _____
   _____
   _____

5. The name or names of the public employees causing the injury, damage, or loss, if known.
   _____
   _____

6. **If amount claimed totals less than $10,000:** The amount claimed if it totals less than ten thousand dollars ($10,000) as of the date of presentation of the claim, including the estimated amount of any

prospective injury, damage, or loss, insofar as it may be known at the time of the presentation of the claim, together with the basis of computation of the amount claimed.

Amount Claimed and basis for computation: _____

_____

_____

If amount claimed exceeds $10,000: If the amount claimed exceeds ten thousand dollars ($10,000), no dollar amount shall be included in the claim. However, it shall indicate whether the claim would be a limited civil case. A limited civil case in one where the recovery sought, exclusive of attorney fees, interest and court costs does not exceed $25,000. An unlimited civil case is one which the recovery sought is more than $25,000 (See CCP §86.)

☐ Limited Civil Case ☐ Unlimited Civil Case

You are required to provide the information requested above, plus your signature on page 3 of this form, in order to comply with Government Code §910. In addition, in order to conduct a timely investigation and possible resolution of your claim, the city requests that you answer the following questions.

7. Claimant(s) Date(s) of Birth:

_____

8. Name, address and telephone number of any witnesses to the occurrence or transaction which gave rise to the claim asserted:

_____

_____

_____

9. If the claim involves medical treatment for a claimed injury, please provide the name, address and telephone number of any doctor or hospitals providing treatment:

_____

_____

_____

If applicable, please attach any medical bills or reports or similar documents supporting your claim.

10. If the claim relates to an automobile accident:

Claimant(s) Auto Ins. Co.: _____ Telephone: _____

Address: _____

_____

Insurance Policy No.: _____

Insurance Broker/Agent: _____ Telephone: _____

Address: _____

_____

Claimant's Veh. Lic. No.: _____ Vehicle Make/Year: _____

Claimant's Drivers Lic. No.: _____ Expiration: _____

If applicable, please attach any repair bills, estimates or similar documents supporting your claim.

READ CAREFULLY

For all accident claims, place on following diagram name or streets, including North, East, South and West; indicate place of accident by "X" and by showing house numbers or distances to street corners. If Agency Vehicle was involved, designate by letter "A" location of Agency Vehicle when you first saw it, and by "B" location of yourself or your vehicle when	you fist saw Agency Vehicle; location of Agency vehicle at time of accident by "A-1" and location of yourself or your vehicle at the time of the accident by "B-1" and the point of impact by "X". Note: If diagrams below do not fit the situation, attach hereto a proper diagram signed by claimant.

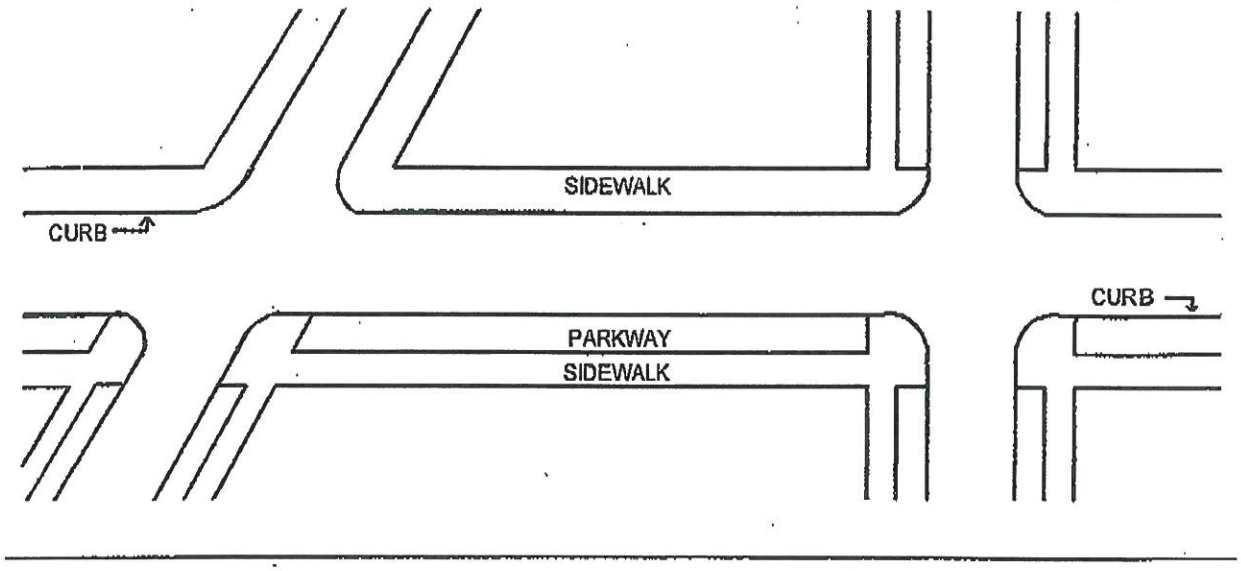

Warning: Presentation of a false claim with the intent to defraud is a felony (Penal Code §72). Pursuant to CCP §1038, the Agency may seek to recover all costs of defense in the event an action is filed which is later determined not to have been brought in good faith and with reasonable cause.

Signature: _____ Date: _____

How a Sewer System Works

A property owner's sewer pipes are called ***service laterals*** and are connected to larger local main and regional trunk lines.
Service laterals run from the connection at the home to the connection with the public sewer. These laterals are the responsibility of the property owner and must be maintained by the property owner.

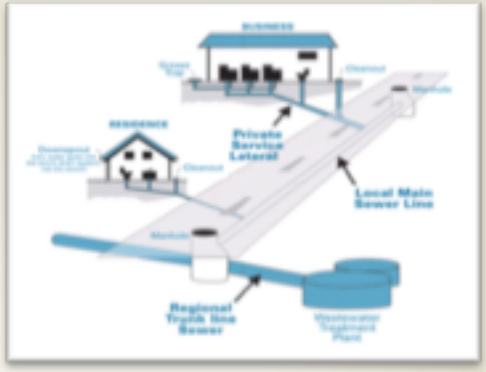

Is my home required to have a backflow prevention device?

Section 710.1 of the Uniform Plumbing Code (U.P.C.) states: *"Drainage piping serving fixtures which have flood level rims located below the elevation of the next upstream manhole cover or private sewer serving such drainage piping* ***shall*** *be protected from backflow of sewage by installing an approved type of backwater valve."*
The intent of Section 710.1 is to protect the building interior from mainline sewer overflows or surcharges.

Additionally, U.P.C. 710.6 states: *"Backwater valves* ***shall*** *be located where they will be accessible for inspection and repair at all times and, unless continuously exposed, shall be enclosed in a masonry pit fitted with an adequately sized removable cover."*

If you have a sewage spill from your private sewer line that impacts storm drains, waterways or public property, contact:

City of Willits
(707) 459-6122

Mendocino County Environmental Health
(707) 463-4466
California Health and Safety Code, Sections 5410-5416 requires:

- No person shall discharge raw or treated sewage or other waste in a manner that results in contamination, pollution, or a nuisance.
- Any person who causes or permits a sewage discharge to any state waters:
  - Must immediately notify the local health agency of the discharge.
  - Shall reimburse the local health agency for services that protect the public's health and safety.
  - Who fails to provide the required notice to the local health agency is guilty of a misdemeanor and shall be punished by a fine (between $500–$1,000) and/or imprisonment for less than one year.

North Coast Regional Water Quality Control Board
(213) 576-6600
Requires the prevention, mitigation, response to, and reporting of sewage spills.

California Governor's Office of Emergency Services (CalOES)
800.852.7550
California Water Code, Article 4, Chapter 4, Sections 13268-13271 & California Code of Regulations, Title 23, Division 3, Chapter 9.2, Article 2, Sections 2250-2260 require:

- Any person who causes or permits sewage in excess of 1,000 gallons to be discharged to state waters shall immediately notify the Office of Emergency Services.
- Any person who fails to provide the notice required by this section is guilty of a misdemeanor and shall be punished by a fine (less than $20,000) and/or imprisonment for not more than one year.

Sewer Spill Reference Guide

Your Responsibilities as a Private Property Owner

Provided to you by:

City of Willits

380 East Commercial Street
Willits, CA 95490
(707) 459-6122

Copyright © 2004-2014
DKF Solutions Group
All rights reserved.

How do sewage spills happen?

Sewage spills occur when the wastewater in underground pipes overflows through a manhole, cleanout, or broken pipe. Most spills are relatively small and can be stopped and cleaned up quickly, but left unattended they can cause health hazards, damage to homes and businesses, and threaten the environment, local waterways, and beaches.

CAUTION!

When trying to locate a sewer problem, never open manholes or other public sewer structures. Only our crews are allowed to open & inspect these structures.

Common causes of sewage spills

- Grease build-up
- Tree roots
- Broken/cracked pipes
- Missing or broken cleanout caps
- Undersized sewers
- Groundwater/rainwater entering the sewer system through pipe defects and illegal connections

Prevent most sewage backups with a Backflow Prevention Device

This type of device can help prevent sewage backups into homes and businesses. If you don't already have a Backflow Prevention Device, contact a professional plumber or contractor to install one as soon as possible.

Protect the environment!

If you let sewage from your property discharge to a gutter or storm drain, you may be subject to penalties and/or out-of-pocket costs for clean-up and enforcement efforts. A property owner may be charged for costs incurred by agencies responding to spills from private properties.

What to look for:

Sewage spills can be a very noticeable gushing of water from a manhole or a slow water leak that may take time to be noticed. Don't dismiss unaccounted-for wet areas. Look for:

- Drain backups inside the building.
- Wet ground and/or water leaking around manhole lids onto your street.
- Leaking water from cleanouts or outside drains
- Unusual odorous wet areas: sidewalks, external walls, ground/landscape around a building.

The following are indicators of a possible obstruction in your sewer line:

- Water comes up in floor drains, showers or toilets.
- Toilets, showers or floor drains below ground level drain very slowly.

What to do if there is a spill:

Immediately notify the City of Willits. Our crews locate the blockage and determine if it is in the public sewer; if it is the crew removes the blockage and arranges for cleanup. If the backup is in your private internal plumbing or in the private service laterals, you are required to immediately:

- Control and minimize the spill by shutting off or not using the water
- Keep sewage out of the storm drain system using sandbags, dirt and/or plastic sheeting
- Call a plumbing professional to clear blockages and make repairs as needed. Look in the yellow pages under "Plumbing Drain & Sewer Cleaning" or "Sewer Contractors."
- Always notify your sewer/public works department or public sewer district of sewage spills.

Spill cleanup inside the home:

For large clean ups, a professional cleaning firm should be contacted to clean up impacted areas, You can locate local firms by looking in the Yellow Pages under "Water Damage" or "Fire Damage." If you hire a contractor, it is recommended to get estimates from more than one company. Sometimes, homeowner's insurance will pay for the necessary cleaning due to sewer backups. Not all policies have this coverage, so check with your agent.

If you decide to clean up a small spill inside your home, protect yourself from contamination by observing the following safety measures. Those persons whose resistance to infection is compromised should not attempt this type of clean up.

Other Tips:

- Keep children and pets out of the affected area until cleanup has been completed.
- Turn off heating/air conditioning systems
- Wear rubber boots, rubber gloves, and goggles during cleanup of the affected area.
- Discard items that cannot be washed and disinfected (such as: mattresses, rugs, cosmetics, baby toys, etc.)
- Remove and discard drywall and insulation that has been contaminated with sewage or flood waters.
- Thoroughly clean all hard surfaces (such as flooring, concrete, molding, wood and metal furniture, countertops, appliances, sinks and other plumbing fixtures) with hot water and laundry or dish detergent.
- Help the drying process with fans, air conditioning units, and dehumidifiers.
- After completing cleanup, wash your hands with soap and water. Use water that has been boiled for 1 minute (allow the water to cool before washing your hands) OR use water that has been disinfected (solution of 1/8 teaspoon of household bleach per 1 gallon of water). Let it stand for 30 min. If water is cloudy, use ¼ teaspoon of household bleach per 1 gallon of water.
- Wash clothes worn during cleanup in hot water and detergent (wash apart from uncontaminated clothes).
- Wash clothes contaminated with sewage in hot water and detergent. Consider using a Laundromat until your onsite wastewater system has been professionally inspected and serviced.
- Seek immediate attention if you become injured or ill.

Spill cleanup outside the home:

- Keep children and pets out of the affected area until cleanup has been completed.
- Wear rubber boots, rubber gloves, and goggles during cleanup of affected area.
- Clean up sewage solids (fecal material) and place in properly functioning toilet or double bag and place in garbage container.
- On hard surfaces areas such as asphalt or concrete, it is safe to use a 2% bleach solutions, or ½ cup of bleach to 5 gallons of water, but don't allow it to reach a storm drain as the bleach can harm the environment.
- After cleanup, wash hands with soap and water. Use water that has been boiled for 1 minute (allow to cool before washing your hands) OR use water that has been disinfected (solution of 1/8 teaspoon of household bleach per 1 gallon of water). Let it stand for 30 min. If water is cloudy, use ¼ teaspoon of household bleach per 1 gallon of water.
- Wash clothes worn during cleanup in hot water and detergent (wash apart from uncontaminated clothes).
- Wash clothes contaminated with sewage in hot water and detergent. Consider using a Laundromat until your onsite wastewater system has been professionally inspected and serviced.
- Seek immediate attention if you become injured/ill.

City of Willits

On (date) _____, at (location)

_____,
we responded to a reported blockage of the sanitary sewer service to your property.

We discovered a blockage in:

- ☐ The sanitary sewer main and cleared the line
- ☐ The City-maintained portion of your sanitary sewer lateral and cleared the line.
- ☐ Your portion of the sanitary sewer lateral, which is your responsibility to maintain. We also found the City's portion of the lateral and the main to be flowing normally.

If you require assistance to clear your portion of the lateral you can look in the Yellow Pages of your telephone book under "Sewer Contractors" or "Plumbing Drains & Sewer Cleaning". If you plan to hire a contractor we recommend getting estimates from more than one company.

City of Willits representative notes: _____

_____

_____

City of Willits Representative:

_____

For questions or comments, please call
City of Willits
(707) 459-6122

City of Willits

On (date) _____, at (location)

_____,
we responded to a reported blockage of the sanitary sewer service to your property.

We discovered a blockage in:

- ☐ The sanitary sewer main and cleared the line
- ☐ The City-maintained portion of your sanitary sewer lateral and cleared the line.
- ☐ Your portion of the sanitary sewer lateral, which is your responsibility to maintain. We also found the City's portion of the lateral and the main to be flowing normally.

If you require assistance to clear your portion of the lateral you can look in the Yellow Pages of your telephone book under "Sewer Contractors" or "Plumbing Drains & Sewer Cleaning". If you plan to hire a contractor we recommend getting estimates from more than one company.

City of Willits representative notes: _____

_____

_____

City of Willits Representative:

_____

For questions or comments, please call
City of Willits
(707) 459-6122

Appendix C

SANITARY SEWER OVERFLOW RESPONSE PACKET

© 2004-2014 DKF Solutions Group, LLC. All rights reserved.

Sanitary Sewer Overflow Response Packet
Table of Contents

Form	Form Number
Instructions and Chain of Custody	envelope label
Responding to a Sanitary Sewer Overflow	C-1
Sewer Overflow Report	-2
Start Time Determination Form	-3
Volume Estimation Forms	-4a, -4b, -4c
Collection System Failure Analysis Report	-5
Regulatory Notifications Packet	
Instructions	envelope
Regulatory Reporting Guide	A-1
Category 1 SSO Reporting Checklist	-2a
Category 2 & 3 SSO Reporting Checklist	-2b
Public Posting	n/a
Door Hanger	n/a
Pamphlet	n/a

For pre-assembled packets contact DKF Solutions Group at (707) 373-9709 or kpatzer@dkfsolutions.com

© 2004-2014 DKF Solutions Group, LLC. All rights reserved.

In the event of a **Sanitary Sewer Overflow**
READ THIS FIRST

- ☐ **If this is a Category 1 SSO greater than or equal to 1,000 gallons contact CalOES at (800) 852-7550.**
- ☐ **Check here if you believe that fats, roots, oils and/grease (FROG) caused or contributed to the SSO.**
- ☐ **Contact the City Manager at (707) 459-4601 for any media requests.**

Instructions

Collections Crew:	
❑ Follow the instructions on the Sewer Overflow Response Flowchart (C-1). ❑ Refer to the Field Guide as necessary. ❑ Place completed forms in this envelope, complete the Chain of Custody record (right) and forward this packet to the Chief Plant Operator.	Print Name: _____ Initial: _____ Date: _____ Time: _____

Chief Plant Operator:	
❑ Review the enclosed forms. ❑ Complete the Regulatory Notifications Packet. ❑ Archive this packet and all other information regarding this overflow incident according to City policy. ❑ Debrief using the Collection System Failure Analysis Form.	Print Name: _____ Initial: _____ Date: _____ Time: _____

© 2004-2014 DKF Solutions Group, LLC. All rights reserved.

C-1
Side A

Sanitary Sewer Overflow Response Packet
Overflow Response Flowchart

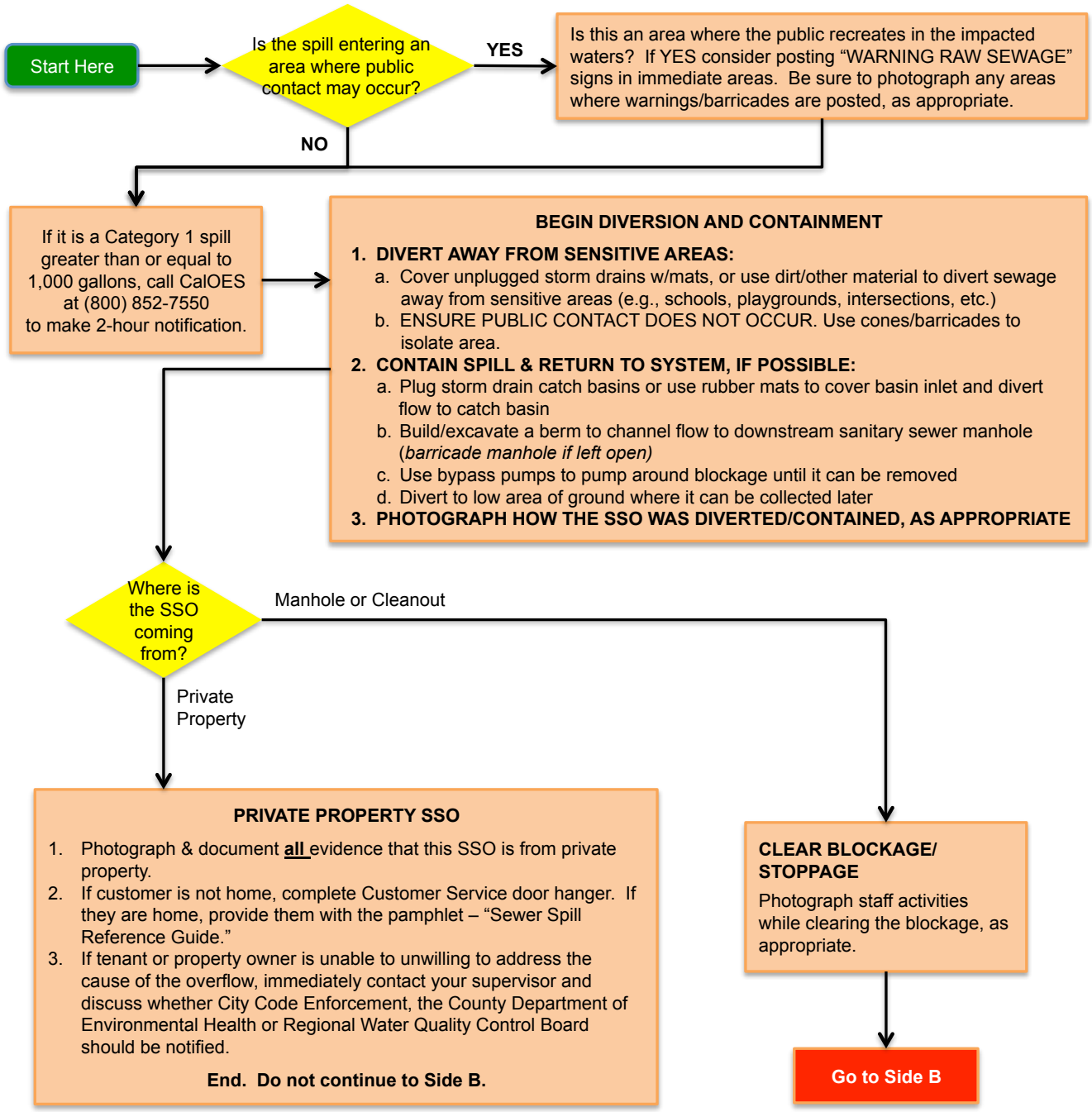

MEDIA AND PUBLIC RELATIONS GUIDELINES:

Exercise caution in contacts with the public or media when you respond to a spill. Any information you provide or statements you make may become pertinent in the event of possible court action, it is important to **AVOID THE FOLLOWING**:

- Giving out the wrong information including providing incorrect facts about a company or other agency
- Making accusations against customers, businesses or other agencies
- Speculating about the situation you are responding to

Be courteous and attempt to provide accurate information to questions within the limits above. In some cases, it may be appropriate to say that we do not have any information, or to delay answering a question and then to say when an answer might be available.

In most cases, refer media requests to the media coordinator indicated on the front of the Sewer Overflow Packet envelope.

© 2004-2014 DKF Solutions Group, LLC. All rights reserved.

Sanitary Sewer Overflow Response Packet

Overflow Response Flowchart

C-1
Side B

Continue Here From Side A

Has the SSO reached surface waters?

NO → Were storm drains impacted?

YES ↓

Determine if water quality samples need to be taken. (Note: Water quality samples must be taken for SSOs when 50,000 gallons or greater have reached surface waters.)

If applicable, follow sampling procedures to collect receiving waters samples. Send samples to:

Alpha Labs
208 Mason Street
Ukiah, CA 95482

Assign staff to post "WARNING: RAW SEWAGE" signs or other means of warning along the shoreline of impacted receiving waters as appropriate, or as directed by the County Environmental Health Department. Be sure to document how many signs were posted and where they were posted.

Is it feasible/practical to contain/recover any of the SSO from the receiving waters?

NO → Were storm drains impacted?

YES ↓

Contact the Chief Plant Operator at (707) 841-7911 to request outside assistance, as appropriate.

Were storm drains impacted?

NO → AREA CLEANUP

YES ↓

STORM DRAIN CLEANING SOP

1. Seal or berm the storm drain immediately downstream of point the SSO reached
2. Photograph impacted storm drain catch basins before cleaning
3. Vacuum any visible sewage – *Record the volume of sewage recovered*
4. Flush impacted sections of storm drain with 3X amount of SSO, if possible – *Record volume of flush water*
5. Ensure all visible signs of sewage have been removed
6. Return flush water to sanitary sewer – *Record volume of flush water recovered*
7. Photograph all storm drain catch basins after cleaning is completed

AREA CLEANUP

1. **Assign staff to begin cleanup**
   NOTE: If SSO was caused by a failure in a private service line, clean up impacted public areas & document staff time, equipment used & expenses incurred
2. **Remove all signs of gross pollution**
   (toilet paper, solids, grease, etc.)
3. **Flush area w/unchlorinated water – Unless raining**
   (3X amount of SSO, if possible)
   a. Setup berm/other means to contain all chlorinated flush water so it can be returned to sewer
   b. Don't use disinfectants if they may enter storm drain system and not be fully recovered or if they may enter a water body
4. **Photograph the area when cleanup operations are complete**

ESTIMATE SPILL VOLUME

1. Complete the Start Time Determination form. Remember – the spill was probably occurring for a period of time before it was reported.
2. Estimate and document SSO volume using two or more of the worksheets provided.
3. Complete the Volume Estimation section on the Sanitary Sewer Overflow Report.

DOCUMENTATION

Complete the **Sanitary Sewer Overflow Report.**

Place in Sewer Overflow Packet envelope and follow paperwork routing instructions indicated on the front of the envelope:

1. **All completed forms**
2. **Digital or disposable camera**
3. ***ALL* notes/documentation made**

© 2004-2014 DKF Solutions Group, LLC. All rights reserved.

Sanitary Sewer Overflow Response Packet

Sanitary Sewer Overflow Report

C-2
Side A

INSTRUCTIONS: Complete all items *EXCEPT* those that are shaded gray

SSO Category *(check one)*:

☐ Category 1: Discharge of untreated or partially treated wastewater of any volume resulting from a sanitary sewer system failure or flow condition that either (1) Reaches surface water and/or drainage channel tributary to a surface water; OR (2) Reached a Municipal Separate Storm Sewer System (MS4) and was not fully captured and returned to the sanitary sewer system or otherwise captured and disposed of properly.

☐ Category 2: Discharge of untreated or partially treated wastewater greater than or equal to 1,000 gallons resulting from a sanitary sewer system failure or flow condition that either (1) Does not reach surface water, a drainage channel, or an MS4, OR (2) The entire SSO discharged to the storm drain system was fully recovered and disposed of properly.

☐ Category 3: All other discharges of untreated or partially treated wastewater resulting from a sanitary sewer system failure or flow condition

☐ Spill from Private Lateral (specify): ☐ Single Family Home ☐ Multi-Family Home ☐ High Density Residential (5+ units)
☐ Food Service Establishment (FSE) ☐ Mixed Use Property ☐ Industrial Property ☐ Commercial Property
☐ Public quasi-public institution (hospital, schools, fire department, etc.)

IMMEDIATE NOTIFICATION: If this is a Category 1 SSO ≥1,000 gallons, contact CalOES within 2 hours at (800) 852-7550.

A. SSO LOCATION

SSO Location Name:		
Latitude Coordinates*:	Longitude Coordinates:	
Street Name and Number:		
Nearest Cross Street:	City:	Zip Code:
County:	SSO Location Description:	

B. SSO DESCRIPTION (Complete Volume Estimation Worksheets and/or refer to Field Guide as needed for estimations.)

SSO Appearance Point (check one or more): ☐ Combined Sewer D.I. (Combined CS Only) ☐ Force Main ☐ Gravity Mainline
☐ Lateral Cleanout (Private) ☐ Lateral Cleanout (Public) ☐ Inside Building or Structure ☐ Manhole ☐ Pump Station
☐ Lower Lateral (Private) ☐ Lower Lateral (Public) ☐ Upper Lateral (Private) ☐ Upper Lateral (Public)
☐ Other Sewer System Structure (specify):

Were there multiple appearance points? ☐ No ☐ Yes, number of appearance points:

Did the SSO reach a drainage channel and/or surface water? ☐ Yes (*Category 1)* ☐No

If the SSO reached a storm sewer, was it fully captured and returned to the Sanitary Sewer? ☐ Yes ☐No (*Category 1)*

Was this spill from a private lateral? ☐ Yes ☐No If YES, name of responsible party:

Final Spill Destination: ☐ Ocean/ocean beach* ☐ Surface waters other than ocean ☐ Drainage channel ☐ Building/structure
☐ Separate Storm drain ☐ Combined storm drain ☐ Paved surface ☐ Unpaved surface ☐ Street/curb/gutter
☐ Other:
*Provide name(s) of affected drainage channels, beach, etc.:

Total Estimated SSO volume *(in gallons – 1,000gal or more = Category 1)*: gallons

Est. volume that reached a separate storm drain that flows to a surface water body:	gal	Recovered:	gal
Est. volume that reached a drainage channel that flows to a surface water body:	gal	Recovered:	gal
Est. volume discharged directly to a surface water body:	gal	Recovered:	gal
Est. volume discharged to land:	gal	Recovered:	gal

Calc. Methods: ☐Eyeball ☐Photo Comparison ☐Upstream Lat. Connections ☐Area/Volume (include sketch/photo with dimensions)
☐Other (describe):

C. SSO OCCURRING TIME (complete Start Time Determination Form and then complete information below)

Estimated SSO start date:	Estimated SSO start time:
Date SSO reported to sewer crew:	Time SSO reported to sewer crew:
Date sewer crew arrived:	Time sewer crew arrived:
Who was interviewed to help determine start time?	
Estimated SSO end date:	Estimated SSO end time:

* If multiple appearance points, use the GPS coordinates for the location of the SSO appearance point closest to the failure point/blockage.

© 2004-2014 DKF Solutions Group, LLC. All rights reserved.

Sanitary Sewer Overflow Response Packet

Sanitary Sewer Overflow Report

C-2
Side B

D. CAUSE OF SSO

Where did failure occur? (Check all that apply): ☐ Air Relief or Blow-Off Valve ☐ Force Main ☐ Gravity Mainline ☐ Siphon
☐ Lower Lateral (public) ☐ Lower Lateral (private) ☐ Manhole ☐ Pump Station (specify): ○Controls ○Mechanical ○Power
☐ Upper Lateral (public) ☐ Upper Lateral (private) Other:

SSO cause *(check all that apply)*: ☐ Air Relief or Blow-Off Valve Failure ☐ Construction Diversion Failure ☐ CS Maintenance
☐ Damage by others ☐ Debris (specify): ○from Construction ○from Lateral ○General ○Rags ☐ Flow Exceeded Capacity
☐ FROG (Fats, roots, oil, grease) ☐ Inappropriate Discharge ☐ Natural Disaster ☐ Operator Error ☐ Root Intrusion
☐ Pipe Structural Problem/Failure ☐ Pipe Structural Problem/Failure (Installation) ☐ Rainfall Exceeded Design
☐ Pump Station Failure (specify): ○Controls ○Mechanical ○Power ☐ Siphon Failure ☐ Vandalism
☐ Surcharged Pipe ☐ Non - Dispersible Wipes ☐ Other (specify):

Diameter (in inches) of pipe at point of blockage/spill cause (if applicable):

Sewer pipe material at point of blockage/spill cause (if applicable):

Estimated age of sewer asset at the point of blockage or failure (if applicable):

Description of terrain surrounding point of blockage/spill cause: ☐ Flat ☐ Mixed ☐ Steep

E. SSO RESPONSE

SSO response activities (check all that apply): ☐ Cleaned-Up ☐ Mitigated Effects of Spill ☐ Contained All or Portion of Spill
☐ Restored Flow ☐ Returned All Spill to Sanitary Sewer System ☐ Returned Portion of Spill to Sanitary Sewer System
☐ Property Owner Notified ☐ Other Enforcement Agency Notified (specify) ☐ Other (specify):

SSO response completed (date & time):

Visual inspection result of impacted waters (if applicable):

Any fish killed? ☐ Yes ☐ No Any ongoing investigation? ☐ Yes ☐ No

Were health warnings posted? ☐ Yes ☐ No If yes, provide health warning/beach closure posting/details:

Was there a beach closure? ☐ Yes ☐ No If yes, name of closed beach(es):

Were samples of impacted waters collected? ☐ Yes ☐ No
If YES, select the analyses: ☐ DO ☐ Ammonia ☐ Bacteria ☐ pH ☐ Temperature ☐ Other:

Recommended corrective actions: (check all that apply and provide detail)
☐ Add sewer to preventive maintenance program
☐ Adjust schedule/method of preventive maintenance
☐ Enforcement action against FROG source
☐ Inspect Sewer Using CCTV to Determine Cause
☐ Plan rehabilitation or replacement of sewer
☐ Repair Facilities or Replace Defect
☐ Other (specify)

What major equipment was used in the response?

List all agency personnel involved in the response including name, title and their role in the response:

F. NOTES

G. NOTIFICATION DETAILS

CalOES contacted date and time (if applicable):

CalOES Control Number (if applicable): Spoke to:

This form prepared by: NAME:	TITLE:	DATE:
This form reviewed by: NAME:	TITLE:	DATE:

Place completed form in Sewer Backup Envelope and follow routing instructions.

© 2004-2014 DKF Solutions Group, LLC. All rights reserved.

Sanitary Sewer Overflow Response Packet

Start Time Determination Form

C-3

SSO Start Date: _____ Location: _____

Accurate start time determination is an essential part of SSO volume estimation. Depending on the flow rate, being even one minute off can have a huge impact on the volume estimation. Be as precise as possible. Do not round to quarter hour increments. Start time must be based on all available information (interviews with neighbors, emergency responders, etc.)

What time was the City notified of the SSO? _____ □ AM □ PM

Who notified the City? _____

Did they indicate what time they noticed the SSO? □ YES □ NO If yes, what time? _____ □ AM □ PM

Who at the City received the notification? _____

What time did the crew arrive at the site of the SSO? _____ □ AM □ PM

Who was interviewed regarding the start time of the SSO? Include their name, contact information, and the statement they provided:

Name	Contact Information	Statement

Describe in detail how you determined the start time for this particular SSO:

SSO Start Date: _____ SSO Start Time: _____ □ AM □ PM

SSO End Date: _____ SSO End Time: _____ □ AM □ PM

SSO Duration: _____ **minutes**

This form completed by:

Name: _____ Signature: _____

Job Title: _____ Date: _____

© 2004-2014 DKF Solutions Group, LLC. All rights reserved.

Sanitary Sewer Overflow Response Packet

Volume Estimation: Eyeball Estimation Method

C-4a

Use this method only for small SSOs of less than 200 gallons.

SSO Date: _____ Location: _____

STEP 1: Position yourself so that you have a vantage point where you can see the entire SSO.

STEP 2: Imagine one or more buckets or barrels of water tipped over. Depending on the size of the SSO, select a bucket or barrel size as a frame of reference. It may be necessary to use more than one bucket/barrel size.

STEP 3: Estimate how many of each size bucket or barrel it would take to make an equivalent spill. Enter those numbers in Column A of the row in the table below that corresponds to the bucket/barrel sizes you are using as a frame of reference.

STEP 4: Multiply the number in Column A by the multiplier in Column B. Enter the result in Column C.

	A	B	C
Size of bucket(s) or barrel(s)	**How many of this size?**	**Multiplier**	**Estimated SSO Volume (gallons)**
1 gallon water jug		x 1 gallons	
5 gallon bucket		x 5 gallons	
32 gallon trash can		x 32 gallons	
55 gallon drum		x 55 gallons	
Other: _____ gallons		x _____ gallons	
		Estimated Total SSO Volume:	

STEP 5: Is rainfall a factor in the SSO? ☐Yes ☐No

If yes, what volume of the observed spill volume do you estimate is rainfall? _____ gallons

If yes, describe how you determined the amount of rainfall in the observed spill?

STEP 6: Calculate the estimated SSO volume by subtracting the rainfall from the SSO volume:

_____ gallons – _____ gallons = _____ gallons

Estimated SSO Volume Rainfall **Total Estimated SSO Volume**

Do you believe that this method has estimated the entire SSO? ☐Yes ☐No

If no, you MUST use additional methods to estimate the entire SSO. If yes, it is advisable to use additional methods to support the estimation. Explain why you believe this method has/has not estimated the entire SSO:

This worksheet completed by:

Name: _____ Signature: _____

Job Title: _____ Date: _____

© 2004-2014 DKF Solutions Group, LLC. All rights reserved.

C-4b
Side 1

Sanitary Sewer Overflow Response Packet

Volume Estimation: Duration and Flow Rate Comparison Method

SSO Date: _____ Location: _____

STEP 1: Compare the SSO to reference images on Side 2 to estimate flow rate of the current overflow. Describe which reference photo(s) were used and any additional factors that influenced applying the reference photo data to the actual SSO:

Flow Rate Based on Photo Comparison: _____gallons per minute (gpm)

STEP 2: Complete the **Start Time Determination Form** to provide a detailed description of how start time was determined. Copy the SSO Duration from the Start Time Determination Form here:

SSO Duration: _____minutes

STEP 3: Multiply the flow rate by the SSO duration to calculate the estimated SSO volume.

_____gpm	X	_____minutes	=	_____gallons
Flow Rate		SSO Duration		Estimated SSO Volume

STEP 4: Did the SSO occur during a period of consistent flow in this portion of the system? ☐Yes ☐ No

If no, explain how, based on this portion of the collection system and its users, you believe it may have impacted the estimated SSO volume:

By what percentage are you adjusting the estimation? ☐ increase ☐ decrease _____%

Translate the percentage into gallons: _____gallons

STEP 5: Calculate the adjusted SSO volume estimate:

_____gallons	+ or -	_____gallons	=	_____gallons
Estimated SSO Volume		Adjustment		**Estimated SSO volume**

Do you believe that this method has estimated the entire SSO? ☐Yes ☐No

If no, you MUST use additional methods to estimate the entire SSO. If yes, it is advisable to use additional methods to support the estimation. Explain why you believe this method has/has not estimated the entire SSO:

This worksheet completed by:

Name: _____ Signature: _____

Job Title: _____ Date: _____

© 2004-2014 DKF Solutions Group, LLC. All rights reserved.

IMPORTANT NOTE:

These photographs are provided as examples only and will change with many factors.

SSCSC Manhole Overflow Gauge

CWEA Southern Section Collections Systems Committee
Overflow Simulation courtesy of Eastern Municipal Water District

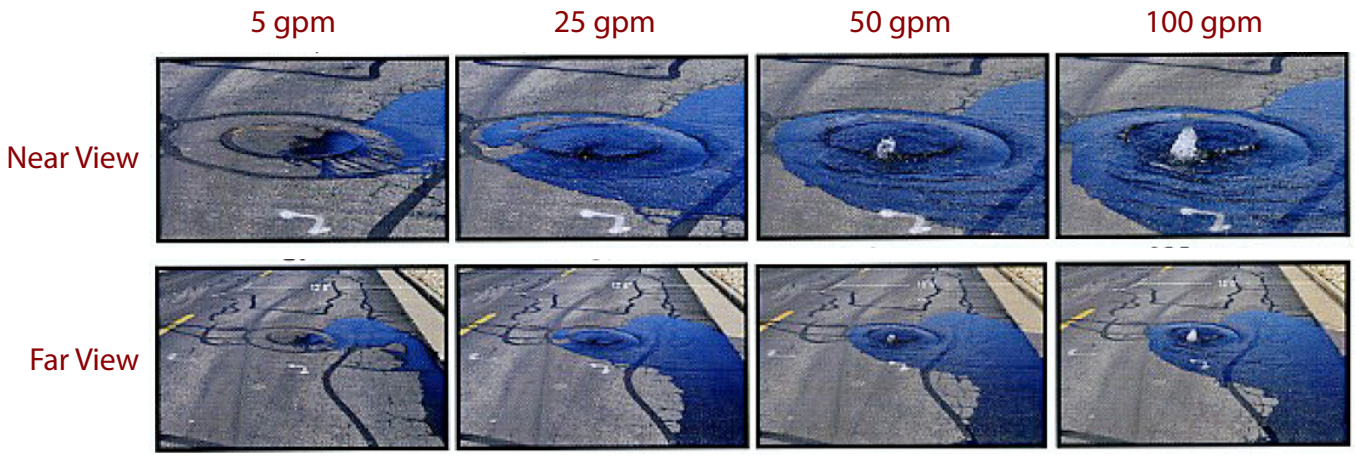

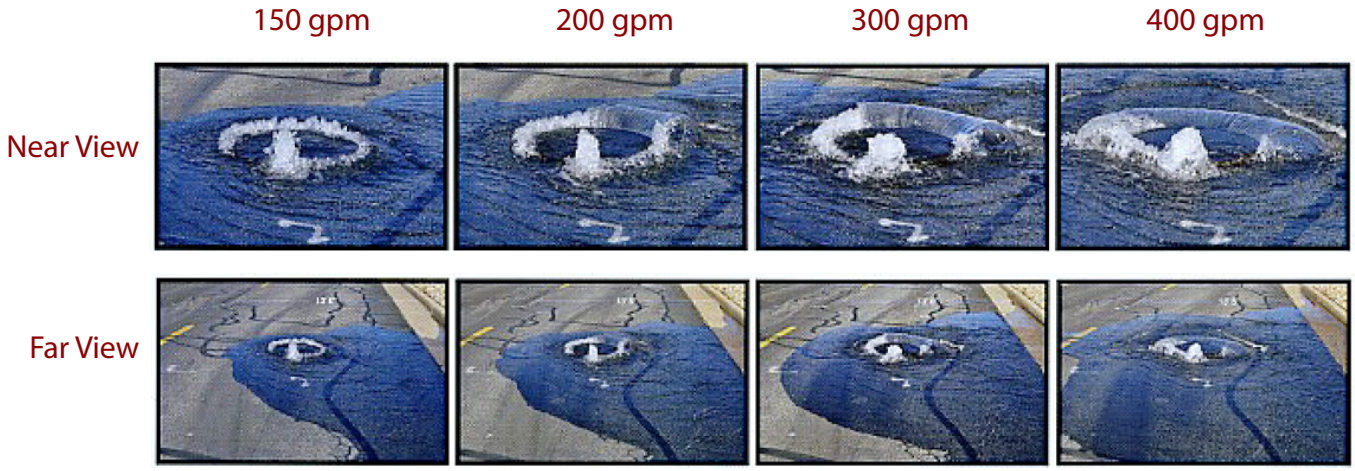

© 2004-2014 DKF Solutions Group, LLC. All rights reserved.

Sanitary Sewer Overflow Response Packet

Volume Estimation: Upstream Lateral Connections Method

C-4c

SSO Date: _____ Location: _____

STEP 1: Determine the number of Equivalent Dwelling Units (EDUs) for this SSO: _____ EDUs
NOTE: A single-family residential home = 1 EDU. For commercial buildings, refer to agency documentation.

STEP 2: This volume estimation method utilizes daily usage data based on flow rate studies of several jurisdictions in California. Column A shows how an average daily of usage of 180 gallons per day is distributed during each 6-hour period. Adjust the table as necessary to accurately represent the actual data.

Complete Column E by entering the number of minutes the SSO was active during each 6-hour time period. Multiply column D times Column E to calculate the gallons spilled during each time period. Add the numbers in Column F together for the Total Estimated SSO Volume per EDU.

	Flow Rate Per EDU				**SSO**	
	A	**B**	**C**	**D**	**E**	**F**
Time Period	Gallons per Period	Hours per period	A÷B = Gallons per Hour	C÷60 = Gallons per Hour	Minutes SSO was active during period	D × E = Gallons spilled per period
6am-noon	72	6	12	0.20		
noon-6pm	36	6	6	0.10		
6pm-midnight	54	6	9	0.15		
midnight-6am	18	6	3	0.05		
Total Estimated SSO Volume per EDU:						

STEP 3: Multiply the Estimated SSO Volume per EDU from Step 2 by the number of EDUs from Step 1.
_____gallons X _____ = _____gallons
Volume per EDU # of EDUs Estimated SSO Volume

STEP 4: Adjust SSO volume as necessary considering other factors, such as activity that would cause a fluctuating flow rate (doing laundry, taking showers, etc.). Explain rationale below and indicate adjusted SSO estimate (attach a separate page if necessary):

Estimated SSO Volume: _____gallons

Do you believe that this method has estimated the entire SSO? ☐Yes ☐No
If no, you MUST use additional methods to estimate the entire SSO. If yes, it is advisable to use additional methods to support the estimation. Explain why you believe this method has/has not estimated the entire SSO:

This worksheet completed by:
Name: _____ Signature: _____
Job Title: _____ Date: _____

© 2004-2014 DKF Solutions Group, LLC. All rights reserved.

Sanitary Sewer Overflow Response Packet

Collection System Failure Analysis

C-5
Side A

To be completed by the Chief Plant Operator

Incident Report #		Prepared By	
SSO/Backup Information			
Event Date/Time	Address		
Volume Spilled	Volume Recovered		
Cause			
Summary of Historical SSOs/Backups/Service Calls/Other Problems			
Date	Cause	Date Last Cleaned	Crew
Records Reviewed By:		Record Review Date:	
Summary of CCTV Information			
CCTV Inspection Date		Tape Name/Number	
CCTV Tape Reviewed By		CCTV Review Date	
Observations			

Go to Side B

© 2004-2014 DKF Solutions Group, LLC. All rights reserved.

Sanitary Sewer Overflow Response Packet

Collection System Failure Analysis

C-5
Side B

Recommendations					
✓	Type	Specific Actions	Who is Responsible?	Completion Deadline	Who Will Verify Completion?
	No Changes or Repairs Required	n/a	n/a	n/a	n/a
	Repair(s)				
	Construction				
	Capital Improvement(s)				
	Change(s) to Maintenance Procedures				
	Change(s) to Overflow Response Procedures				
	Training				
	Misc.				
Comments/Notes:					
Review Date:					

© 2004-2014 DKF Solutions Group, LLC. All rights reserved.

Overflow Emergency Response Plan
Public Posting

DANGER

RAW SEWAGE • AVOID CONTACT

PELIGRO

AGUA CONTAMINADA • EVITE TODO CONTACTO

City of Willits

(707) 459-6122

© 2004-2014 DKF Solutions Group, LLC. All rights reserved.

City of Willits

On (date) _____, at (location)

_____,
we responded to a reported blockage of the sanitary sewer service to your property.

We discovered a blockage in:

- ☐ The sanitary sewer main and cleared the line
- ☐ The City-maintained portion of your sanitary sewer lateral and cleared the line.
- ☐ Your portion of the sanitary sewer lateral, which is your responsibility to maintain. We also found the City's portion of the lateral and the main to be flowing normally.

If you require assistance to clear your portion of the lateral you can look in the Yellow Pages of your telephone book under "Sewer Contractors" or "Plumbing Drains & Sewer Cleaning". If you plan to hire a contractor we recommend getting estimates from more than one company.

City of Willits representative notes: _____

_____

_____

City of Willits Representative:

_____

For questions or comments, please call
City of Willits
(707) 459-6122

City of Willits

On (date) _____, at (location)

_____,
we responded to a reported blockage of the sanitary sewer service to your property.

We discovered a blockage in:

- ☐ The sanitary sewer main and cleared the line
- ☐ The City-maintained portion of your sanitary sewer lateral and cleared the line.
- ☐ Your portion of the sanitary sewer lateral, which is your responsibility to maintain. We also found the City's portion of the lateral and the main to be flowing normally.

If you require assistance to clear your portion of the lateral you can look in the Yellow Pages of your telephone book under "Sewer Contractors" or "Plumbing Drains & Sewer Cleaning". If you plan to hire a contractor we recommend getting estimates from more than one company.

City of Willits representative notes: _____

_____

_____

City of Willits Representative:

_____

For questions or comments, please call
City of Willits
(707) 459-6122

How a Sewer System Works

A property owner's sewer pipes are called ***service laterals*** and are connected to larger local main and regional trunk lines.
Service laterals run from the connection at the home to the connection with the public sewer. These laterals are the responsibility of the property owner and must be maintained by the property owner.

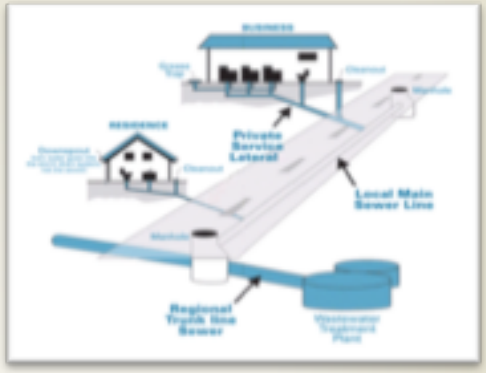

Is my home required to have a backflow prevention device?

Section 710.1 of the Uniform Plumbing Code (U.P.C.) states: *"Drainage piping serving fixtures which have flood level rims located below the elevation of the next upstream manhole cover or private sewer serving such drainage piping* ***shall*** *be protected from backflow of sewage by installing an approved type of backwater valve."*
The intent of Section 710.1 is to protect the building interior from mainline sewer overflows or surcharges.

Additionally, U.P.C. 710.6 states: *"Backwater valves* ***shall*** *be located where they will be accessible for inspection and repair at all times and, unless continuously exposed, shall be enclosed in a masonry pit fitted with an adequately sized removable cover."*

If you have a sewage spill from your private sewer line that impacts storm drains, waterways or public property, contact:

City of Willits
(707) 459-6122

Mendocino County Environmental Health
(707) 463-4466
California Health and Safety Code, Sections 5410-5416 requires:

- No person shall discharge raw or treated sewage or other waste in a manner that results in contamination, pollution, or a nuisance.
- Any person who causes or permits a sewage discharge to any state waters:
  - Must immediately notify the local health agency of the discharge.
  - Shall reimburse the local health agency for services that protect the public's health and safety.
  - Who fails to provide the required notice to the local health agency is guilty of a misdemeanor and shall be punished by a fine (between $500–$1,000) and/or imprisonment for less than one year.

North Coast Regional Water Quality Control Board
(213) 576-6600
Requires the prevention, mitigation, response to, and reporting of sewage spills.

California Governor's Office of Emergency Services (CalOES)
800.852.7550
California Water Code, Article 4, Chapter 4, Sections 13268-13271 & California Code of Regulations, Title 23, Division 3, Chapter 9.2, Article 2, Sections 2250-2260 require:

- Any person who causes or permits sewage in excess of 1,000 gallons to be discharged to state waters shall immediately notify the Office of Emergency Services.
- Any person who fails to provide the notice required by this section is guilty of a misdemeanor and shall be punished by a fine (less than $20,000) and/or imprisonment for not more than one year.

Sewer Spill Reference Guide

Your Responsibilities as a Private Property Owner

Provided to you by:

City of Willits

380 East Commercial Street
Willits, CA 95490
(707) 459-6122

Copyright © 2004-2014
DKF Solutions Group
All rights reserved.

How do sewage spills happen?

Sewage spills occur when the wastewater in underground pipes overflows through a manhole, cleanout, or broken pipe. Most spills are relatively small and can be stopped and cleaned up quickly, but left unattended they can cause health hazards, damage to homes and businesses, and threaten the environment, local waterways, and beaches.

CAUTION!

When trying to locate a sewer problem, never open manholes or other public sewer structures. Only our crews are allowed to open & inspect these structures.

Common causes of sewage spills

- Grease build-up
- Tree roots
- Broken/cracked pipes
- Missing or broken cleanout caps
- Undersized sewers
- Groundwater/rainwater entering the sewer system through pipe defects and illegal connections

Prevent most sewage backups with a Backflow Prevention Device

This type of device can help prevent sewage backups into homes and businesses. If you don't already have a Backflow Prevention Device, contact a professional plumber or contractor to install one as soon as possible.

Protect the environment!

If you let sewage from your property discharge to a gutter or storm drain, you may be subject to penalties and/or out-of-pocket costs for clean-up and enforcement efforts. A property owner may be charged for costs incurred by agencies responding to spills from private properties.

What to look for:

Sewage spills can be a very noticeable gushing of water from a manhole or a slow water leak that may take time to be noticed. Don't dismiss unaccounted-for wet areas. Look for:

- Drain backups inside the building.
- Wet ground and/or water leaking around manhole lids onto your street.
- Leaking water from cleanouts or outside drains
- Unusual odorous wet areas: sidewalks, external walls, ground/landscape around a building.

The following are indicators of a possible obstruction in your sewer line:

- Water comes up in floor drains, showers or toilets.
- Toilets, showers or floor drains below ground level drain very slowly.

What to do if there is a spill:

Immediately notify the City of Willits. Our crews locate the blockage and determine if it is in the public sewer; if it is the crew removes the blockage and arranges for cleanup. If the backup is in your private internal plumbing or in the private service laterals, you are required to immediately:

- Control and minimize the spill by shutting off or not using the water
- Keep sewage out of the storm drain system using sandbags, dirt and/or plastic sheeting
- Call a plumbing professional to clear blockages and make repairs as needed. Look in the yellow pages under "Plumbing Drain & Sewer Cleaning" or "Sewer Contractors."
- Always notify your sewer/public works department or public sewer district of sewage spills.

Spill cleanup inside the home:

For large clean ups, a professional cleaning firm should be contacted to clean up impacted areas, You can locate local firms by looking in the Yellow Pages under "Water Damage" or "Fire Damage." If you hire a contractor, it is recommended to get estimates from more than one company. Sometimes, homeowner's insurance will pay for the necessary cleaning due to sewer backups. Not all policies have this coverage, so check with your agent.

If you decide to clean up a small spill inside your home, protect yourself from contamination by observing the following safety measures. Those persons whose resistance to infection is compromised should not attempt this type of clean up.

Other Tips:

- Keep children and pets out of the affected area until cleanup has been completed.
- Turn off heating/air conditioning systems
- Wear rubber boots, rubber gloves, and goggles during cleanup of the affected area.
- Discard items that cannot be washed and disinfected (such as: mattresses, rugs, cosmetics, baby toys, etc.)
- Remove and discard drywall and insulation that has been contaminated with sewage or flood waters.
- Thoroughly clean all hard surfaces (such as flooring, concrete, molding, wood and metal furniture, countertops, appliances, sinks and other plumbing fixtures) with hot water and laundry or dish detergent.
- Help the drying process with fans, air conditioning units, and dehumidifiers.
- After completing cleanup, wash your hands with soap and water. Use water that has been boiled for 1 minute (allow the water to cool before washing your hands) OR use water that has been disinfected (solution of 1/8 teaspoon of household bleach per 1 gallon of water). Let it stand for 30 min. If water is cloudy, use ¼ teaspoon of household bleach per 1 gallon of water.
- Wash clothes worn during cleanup in hot water and detergent (wash apart from uncontaminated clothes).
- Wash clothes contaminated with sewage in hot water and detergent. Consider using a Laundromat until your onsite wastewater system has been professionally inspected and serviced.
- Seek immediate attention if you become injured or ill.

Spill cleanup outside the home:

- Keep children and pets out of the affected area until cleanup has been completed.
- Wear rubber boots, rubber gloves, and goggles during cleanup of affected area.
- Clean up sewage solids (fecal material) and place in properly functioning toilet or double bag and place in garbage container.
- On hard surfaces areas such as asphalt or concrete, it is safe to use a 2% bleach solutions, or ½ cup of bleach to 5 gallons of water, but don't allow it to reach a storm drain as the bleach can harm the environment.
- After cleanup, wash hands with soap and water. Use water that has been boiled for 1 minute (allow to cool before washing your hands) OR use water that has been disinfected (solution of 1/8 teaspoon of household bleach per 1 gallon of water). Let it stand for 30 min. If water is cloudy, use ¼ teaspoon of household bleach per 1 gallon of water.
- Wash clothes worn during cleanup in hot water and detergent (wash apart from uncontaminated clothes).
- Wash clothes contaminated with sewage in hot water and detergent. Consider using a Laundromat until your onsite wastewater system has been professionally inspected and serviced.
- Seek immediate attention if you become injured/ill.

Appendix D

FIELD SAMPLING KIT

Field Sampling Kit
Table of Contents

Form	Form Number
Procedures for Sampling Receiving Waters and Posting Warnings after a Sewage Spill	FS-1
Sample Collection Chain of Custody Record	-2

The Field Sample Kit contains:

- Cooler w/ice pack
- Latex gloves
- Safety glasses
- 2 ammonia-nitrogen sample bottles (1pt bottle w/H2SO4)
- 20 Sample bottle labels
- Waterproof Pen (i.e. Sharpie®)
- 10 Enterococcus sample bottles (100ml sterilized bottle)
- Combination temperature/pH meter
- Extra batteries for temperature/pH meter
- Chain of Custody form

© 2004-2014 DKF Solutions Group, LLC. All rights reserved.

D-1
Side A

Field Sampling Kit
Procedures for Sampling Receiving Waters and Posting Warnings after a Sewage Spill

Get Field Sampling Kit → Get ice pack from a convenience store and place in cooler → Determine point spill entered waterway – photograph this location (*include a reference point in the photo)* → Don the PPE from the Sampling Kit

- Collect all samples against the direction of the water flow! (face upstream)
- Collect upstream sample first!
- Collect samples well away from the bank (preferably where water is visibly flowing) and 6" below the surface
- Avoid sampling debris or scum layer from the surface.
- Photograph evidence of dead fish!

SAMPLING STEPS

Move 50' upstream of point where spill entered waterway (reference sample). Attach a map of sampling points.

Take out the temp/pH meter. Calibrate it. Take temperature and pH of the water at that sample location. Record those results on the chain of custody form.

Remove the seal from the enterococcus sample container (100ml) just prior to collecting your sample. A chemical has been added to the sample container. Leave the chemical in the bottle and do not rinse.

1. Remove the cap immediately before collecting each sample.
2. Do not allow the inside of the cap to touch anything
3. Holding the bottle in one hand, face upstream and lower the bottle 6" below the water surface. Then sweep the bottle upstream and out of the water. Be careful not to disturb the bottom sediment. Pour a little water out so that bottle is filled to the line. Immediately replace the cap.

Open the ammonia-nitrogen sample container and follow collection process above (steps 1-3) to fill to just below the neck of the jar. NOTE: The ammonia-nitrogen sample bottle contains sulfuric acid – LEAVE THE ACID IN THE BOTTLE AND DO NOT ALLOW IT TO TOUCH YOUR SKIN!

Label all of the samples with their location and note the date and time collected → Place samples in cooler on the ice pack → Take a photo of this sample location (*include a reference point in the photo)*

Move at least 10' downstream of point where spill entered waterway and repeat sampling steps (red boxes) → Complete the Chain of Custody form from the Sampling Kit.

Immediately contact: Alpha Labs at (707) 468-0401 and inform them that the following samples require processing: Ammonia-Nitrogen and Enterococcus. → Take cooler containing the samples and completed chain of custody to Alpha Labs, 208 Mason Street, Ukiah, CA 95482. Samples should be taken to lab within 6 hours of collection time.

Post warning signs as directed by the County Environmental Health Department or the Chief Plant Operator. (Remove Warning Signs and lift restrictions when authorized by County Environmental Health.)

Repeat sampling daily from time the spill is known until the results of two consecutive sets of samples indicate the return to the normal level or cessation of monitoring is authorized by the County Environmental Health Department.

© 2004-2014 DKF Solutions Group, LLC. All rights reserved.

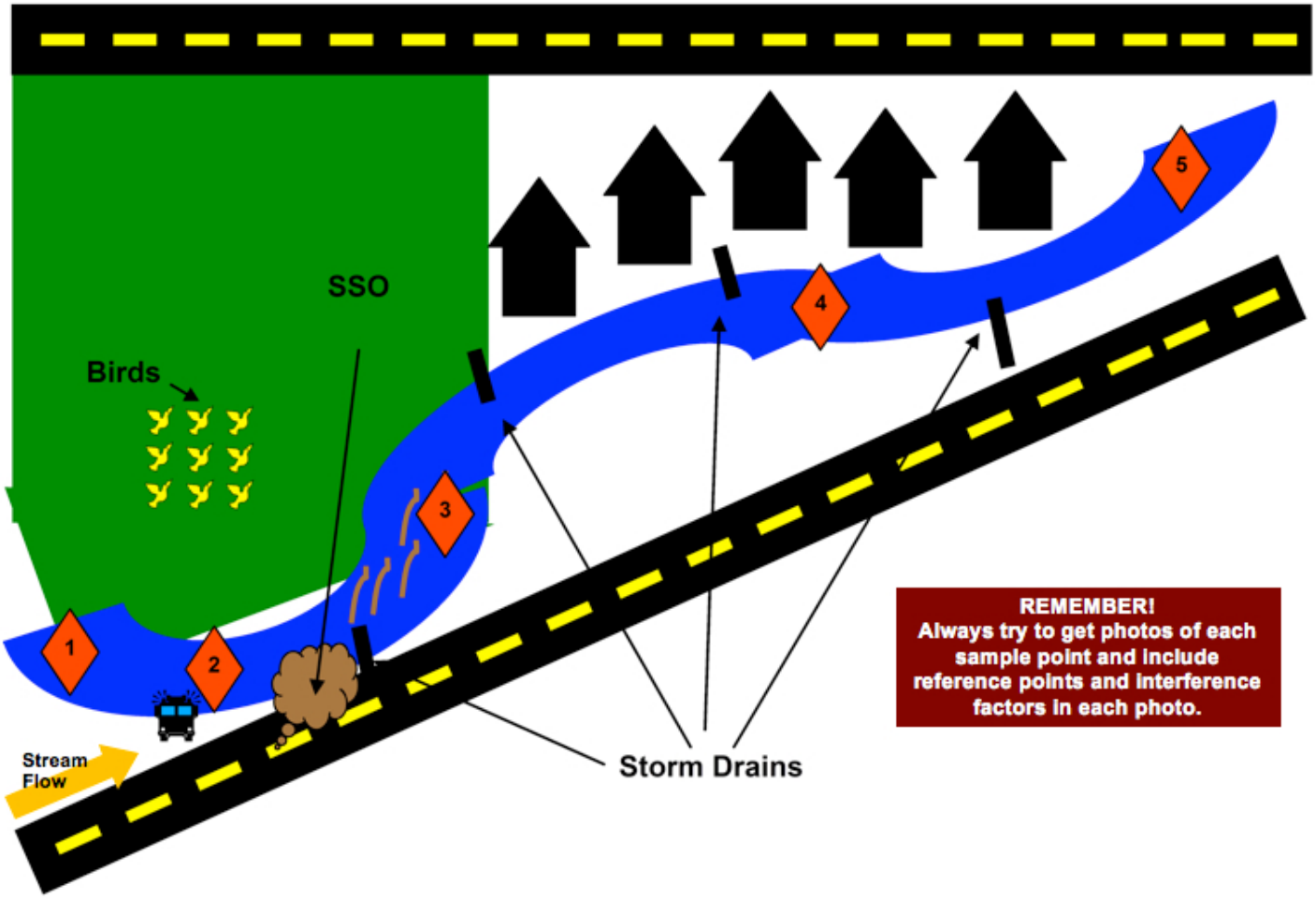

1 **Sample Location 1: Baseline Sample, *no* observable interference from birds, animals, runoff, etc**

2 **Sample Location 2: Baseline Sample, *observable* interference from birds, animals, runoff, etc**
NOTE: Only collect this sample if you observe any possible interfering factors upstream from the spill location

3 **Sample Location 3: Immediately downstream of SSO entry point**

4 **Sample Location 4: Further downstream of SSO entry point – note any possible interfering factors**

5 **Sample Location 5: Further downstream of SSO entry point – note any possible interfering factors**

NOTE: This example is provided for illustrative purposes *only!* Base each sampling event on the geography, drainage and interference factors (*i.e. birds, animals, runoff, etc.)* of the area impacted.

© 2004-2014 DKF Solutions Group, LLC. All rights reserved.

Field Sampling Kit
Sample Collection Chain of Custody Record

D-2

Customer Name				☐	**Hazardous Waste**	**PO#**	
Customer Address				☐	**Unknown Material**	**WO#**	
Customer Telephone		**Mail Code**		**CONTRACT LAB INFORMATION**		**Turnaround Requirement**	
Program Name				Ship to:		☐ Normal (21 days)	
Lab Program Coordinator		**Phone #**		Ship Date:		☐ Rush: _____	
Sampled By				Courier:		☐ Other:	

LIMS# (Issued by Lab)	SAMPLE COLLECTION INFORMATION							# Containers	Matrix*	Analysis Requested					QA/QC Requirements	
	Date	Time	Type		Sample Location	Field pH	Field Temp			Ammonia	Enterococcus				☒ Lab Standard	
															☐ Special (see attached)	
			Composite	Grab											Remarks/Notes	
			☐	☒	Upstream			2	A	☒	☒	☐	☐	☐		
			☐	☒	Entry Point			2	A	☒	☒	☐	☐	☐		
			☐	☒	Downstream			2	A	☒	☒	☐	☐	☐		
			☐	☐				2		☐	☐	☐	☐	☐		
			☐	☐				2		☐	☐	☐	☐	☐		
			☐	☐				2		☐	☐	☐	☐	☐		
			☐	☐				2		☐	☐	☐	☐	☐		

*Matrix: P = Potable Water, W = Wastewater, A = Ambient Water, G = Groundwater, S = Soil, B = Biosolids, I = Industrial, O = Other (specify in remarks)

Relinquished	Date	Time

Relinquished to	Date	Time

Transport/Shipping Information		
☐ USPS	☐ UPS	☐ FedEx
Tracing #:		
☐ Other:		

Sample Receiving Documentation

Container intact? ☐ Yes ☐ No	Correct container? ☐ Yes ☐ No	Field preserved? ☐ Yes ☐ No	Custody tape intact? ☐ Yes ☐ No
Cooled? ☐ Yes ☐ No	Temp. Blank? ☐ Yes ☐ No (°C)	Comments:	
Sample distribution: ☐ Lab bench ☐ Ice chest ☐ Walk-in cooler shelf #		Disposal Date:	Disposed by: (inits.)
C-O-C Distribution Date: By:	☐ Lab Admin File ☐ Prog/proj Mgr. ☐ Lab Prog. Coord. ☐ Delivery courier ☐ Pick-up courier		

© 2004-2014 DKF Solutions Group, LLC. All rights reserved.

Appendix E

CONTRACTOR ORIENTATION

© 2004-2014 DKF Solutions Group, LLC. All rights reserved.

CONTRACTOR ORIENTATION

The following procedures are to be followed in the event that you cause or witness a Sanitary Sewer Overflow.

Contractor causes or witnesses a Sanitary Sewer Overflow

↓

Immediately Notify the City

Police Non-Emergency Dispatch: (707) 459-6122

↓

Protect the Storm Drains using mats, dikes, berms, etc.

↓

Protect the Public

If the spill is entering an area where public contact may occur, and if it is safe to do so, prevent, to the extent possible, public contact with the sewage until a City Collections Crew arrives.

↓

Provide Information

Provide City Collections Crew with information about the overflow such as start time, appearance point, suspected cause, weather conditions, etc.

↓

Direct ALL media and public relations requests to:

City Manager: (707) 459-4601

© 2004-2014 DKF Solutions Group, LLC. All rights reserved.

Sanitary Sewer Overflows

How to avoid them and what to do if you don't

What? A sanitary sewer overflow (SSO) is a discharge of untreated human and industrial waste before it reaches the wastewater treatment facility.

Where? SSOs usually occur through manholes, plumbing fixtures and service cleanouts.

Why? SSOs are usually caused by grease, debris, root balls, or personal hygiene products blocking the sewer lines, or by unusually high flow volume.

How to prevent SSOs:

...when clearing plugged sewer laterals:

- Remove root balls, grease blockages and any other debris from the sewer
- If you can't prevent root balls, grease or debris from entering the sewer main, call us at (707) 459-6122, so we can work with you to remove the blockage and prevent blockages further downstream
- Use plenty of water to flush lines.

...when constructing or repairing sewer laterals:

- Contact the Planning Department at (707) 459-4601 for a permit and lateral specifications.
- Check your work area. Make sure there is no debris left in the sewer line before you backfill.
- Avoid offset joints, which may make sewer lines vulnerable to root intrusion and grease or debris accumulation. Properly bed your joints and don't hammer tap.

If you cause or witness an SSO, immediately contact:

City of Willits

(707) 459-6122

Non-Emergency Police Dispatch

City of Willits

City of Willits
380 Commercial Street
Willits, California 95490

www.thecityofwillits.com

© 2004-2014 DKF Solutions Group, LLC. All rights reserved.

CITY OF WILLITS
111 E. Commercial St., Willits, CA 95490

FATS, OILS & GREASE (FOG) PERMIT APPLICATION

APPLICANT (OWNER) NAME: _____

FACILITY NAME: _____ **PHONE:** _____

FACILITY ADDRESS: _____

TYPE (Circle any that apply): **SIT-DOWN** **TAKE-OUT** **DRIVE-THROUGH**

MAXIMUM SEATING CAPACITY: _____ **MAXIMUM HOURS OF OPERATION PER DAY:** _____

TYPE OF FOOD PREPARATION	YES	NO
Deep Frying	___	___
Pan Frying	___	___
Grilling	___	___
Heating	___	___
Baking	___	___
Pre-prepared Food Assembly	_____	

TYPE OF EQUIPMENT	
3-Compartment Sinks (Quantity):	___
Other Sinks (Quantity):	___
Garbage Disposal :	___ Yes ___ No
Dishwasher (rating or size):	___ GPM or ___ Gallons
Grease Trap or Interceptor:	___ GPM or ___ Gallons
Grease Trap or Interceptor Make/ Model No.:	_____

I hereby certify that the above information is correct and that changes in any of the above information will require a re-application and possible increase in the size or type of grease trap required. I also agree to have the grease interceptor cleaned by a certified grease trap cleaning company at a minimum of once a month, or more frequently if needed, to maintain the grease interceptor in a proper operating condition. This permit is valid only for the specific facility, ownership, processes and operations indicated above. As such, it cannot be sold, transferred or reassigned. There is a $60 annual fee for FOG Permits, due at the time of application; annual renewals are due July 1st.

PLEASE PROVIDE A SKETCH OF THE PLUMBING AT THE FACILITY
SPACE HAS BEEN PROVIDED ON PAGE 2 OF THIS APPLICATION

SIGNATURE: _____ DATE: _____

NAME (PRINT): _____

REQUIREMENTS (TO BE COMPLETED BY CITY STAFF)

IN-GROUND GREASE INTRCEPTOR

NUMBER OF SEATS =

ESTIMATED FLOW/SEAT =

RETENTION TIME (RT) =

STORAGE FACTOR (SF) =

SIZE = (# SEATS) X (EST. FLOW/SEAT) X (RT) X (SF)

UNDER-THE-SINK GREASE TRAP

SIZE = 40 % OF SINK VOLUME & OTHER

0.40 X **GALS**

GPM

TYPE: IN-GROUND INTERCEPTOR **GAL** **UNDER-THE-SINK** **GPM**

SPECIAL REQUIREMENTS:

(THIS LOCATION IS SERVED BY WATER AND SEWER)

SIGNATURE: **DATE:**

PROVIDE A SKETCH OF THE PLUMBING AT THE FACILITY BELOW

PLEASE INCLUDE SINK, GREASE REMOVAL DEVICE, BATHROOM, AND DRAIN LOCATIONS

CITY OF WILLITS
111 E. Commercial St., Willits, CA 95490

FATS, OILS, & GREASE (F.O.G.) PERMIT

PERMIT NUMBER: _____ **EFFECTIVE DATE:** _____

BUSINESS NAME: _____

ADDRESS: _____

OWNER (PERMITTEE): _____ **PHONE:** _____

The above Industrial User ("Permittee") is authorized to discharge industrial wastewater into the City of Willits sewer collection system. This discharge will be in accordance with the City's most current Sewer Code and/or Ordinance, any applicable provisions of federal or state law or regulation, and in accordance with discharge point(s), effluent limitations, monitoring requirements, and other conditions set forth herein.

Permittee shall comply with the items checked below, in addition to all standard provisions that follow.

- ☐ Permittee shall maintain a program of consistent grease trap, interceptor or sump cleaning and maintenance to prevent excessive buildup of grease, oil and/or solids in the sewer lateral and/or from entering the sewer system. Permittee shall retain copies of cleaning receipts if commercially cleaned, or maintain a cleaning log, if in-house maintenance is done. The in-house log shall include cleaning dates, employee's name, and owner/manager's verification.
- ☐ Grease trap treatment and/or additives shall be approved by the City of Willits. The use of chemical enzymes is strictly prohibited.
- ☐ All discharges into grease traps shall comply with the City of Willits FOG Program Policy, Municipal Code 13.04.310.
- ☐ The outside washing of floor mats, serving carts, or any other equipment is prohibited unless a City approved wash area has been established.
- ☐ Permittee shall implement and maintain a program of Best Management Practices to prevent the accumulation of grease and debris on the premises, and reduce the discharge of pollutants to the storm collection system. All storm drain inlets on the premises shall be cleaned to remove trash, dirt, and other pollutants.
- ☐ Grease trap or interceptor cleaning shall include the removal of all contents, including floating materials, wastewater, sludges and solids. It shall be the responsibility of the permittee to ensure that the interceptor is properly cleaned and that all fittings and fixtures inside the interceptor are in proper working function.
- ☐ Special Provision: _____

NOTICE: Any grease interceptor containing 12 inches or more of grease and/or solids on the inlet side or 6 inches or more of grease and/or solids on the outlet side is a violation. Any grease trap 100 lbs or smaller with 3 inches of grease and/or solids is a violation.

CERTIFICATION: I agree to comply with all provisions of this permit and all other regulations set forth within the City's most current Sewer Code and/or Ordinance and/or any applicable provisions of federal or state law or regulation.

Owner/Manager:_____Title:_____

FOG Permit Inspector:_____ Date:_____

STANDARD CONDITIONS:

1. Permittee shall comply with all general prohibitive discharge standards set forth in the City's most current Sewer Code and/or Ordinance, except as specifically permitted. However, no special agreement or arrangement between the City and any person or agency shall constitute a waiver of state or federal standards or the City's technically based local limits.

2. Permittee shall not contribute the following substances to the Publicly Owned Treatment Works (POTW):
   a. any liquids, solids or gasses which by reason of their nature or quantity, may be sufficient either alone or by interaction with any other substances to cause fire or explosion, or be injurious in any other way to the POTW or to the operation of the POTW.
   b. solid or viscous substances which may cause obstruction to sewer or interference with the POTW.
   c. wastewater having a pH less than 5.0 or greater than 12.5, or wastewater having corrosive property capable of causing damage or hazard to structures, equipment, and/or personnel of the POTW.
   d. wastewater having a temperature that inhibits biological activity in the POTW treatment plant resulting in interference. In no case will wastewater have a temperature at the introduction into the POTW which exceeds 40 degrees Celsius (104 degrees Fahrenheit).
   e. A slug load shall not have a flow rate or pollutant concentration that exceeds for any time period longer than fifteen (15) minutes more than five (5) times the average 24 hour concentration, quantities, or flow during normal operations. A slug load shall be defined as a load that has a flow and/or constituent concentration that causes a process upset or pass through of the POTW.
   f. discharges containing phenols or other taste and odor producing substances in concentrations that exceed City limits.
   g. discharges of quantities that are not amenable to treatment or reduction by wastewater treatment processes employed, or are amenable to treatment only to such a degree that the treatment plant effluent cannot meet water quality requirements.
3. LIABILITY: Permittee shall be held liable for any damage to the POTW resulting from unauthorized discharge into the sewer. Any person who violates any order issued by the City for violation of provisions of this title regulating or prohibiting discharge of wastewater which causes or threatens to cause a condition of contamination, pollution, or nuisance, as defined in Section 13.04.130, or as amended, may be liable civilly per code 13.04.360.

4. INSPECTION AND ENTRY: Permittee shall allow a representative of the City of Willits, upon presentation of credentials to:
   a. enter permittee's premises.
   b. have access to any records kept under the conditions of this permit.
   c. inspect any facilities, equipment (including monitoring and control equipment), practices, or operations regulated or required under this permit.
   d. sample or monitor any substances at any location.
   e. inspect any production, manufacturing, fabricating, or storage area where pollutants, regulated under the permit, could originate, be stored, or be discharged to the sewer system.

5. RECORDS RETENTION: Maintenance of records relating to wastewater discharges as specified by the City shall be available at all times for inspection, review, and copying purposes to determine compliance with local, State, and Federal regulations. These records shall be maintained for a minimum of three years or longer. All records that pertain to matters that are the subject of special orders or any other enforcement or litigation activities brought by the City shall be retained and preserved by the permittee until all enforcement activities have concluded and all the periods of limitation with respect to any and all appeals have expired.

6. CONFIDENTIAL INFORMATION: Except for data determined to be confidential, all records required by this permit shall be made available by the City for public inspection, upon request.

7. DILUTION: No permittee shall increase the use of potable or process water, or in any way attempt to dilute a discharge as a partial or complete substitute for adequate treatment to achieve compliance with the limitations contained in this permit.

8. PROPER DISPOSAL OF PRETREATMENT SLUDGES AND SPENT CHEMICALS: The disposal of spent chemicals and sludges generated shall be accomplished in accordance with Section 405 of the Clean Water Act and the Resource Conservation and Recovery Act, Subtitles C and D.

9. SEVERABILITY: Provisions of this permit are severable. If any of the provisions of this permit, or the application of any provisions of this permit is held invalid, the application of such provision to other circumstances, and the remainder of this permit shall not be affected.

10. PROCESS CHANGES: Permittee shall receive prior approval before changing any process that would cause a change in flow, constituent characteristics, or strength of regulated process effluent.

11. SECONDARY CONTAINMENT: Permittee shall protect sanitary sewer drains by providing secondary containment or by removing the hazardous materials to prevent the discharge to the system. Secondary containment shall be constructed in accordance with the Uniform Fire Code.

12. DUMPSTER/GREASE CONTAINER MAINTENANCE: Permittee shall maintain a program of consistent dumpster and grease container area maintenance to prevent grease and other debris from entering the storm drain system. Cleaning of the area shall be performed in a manner that does not result in the discharge of pollutants to the storm drain system.

13. CHANGE OF OWNERSHIP/ ADDRESS: A change of ownership or change of address shall require the owner to submit a new permit application to the City.

14. PROHIBITIONS: Perchlorothylene / tetrachloroethylene is prohibited from being discharged to the sanitary sewer.