## WATER SYSTEM STANDARD PLANS

## DESCRIPTION

### 500 SERIES - WATER SYSTEM

| | |
|---|---|
| 500 | Water Main Construction Notes |
| 501 | Gate Valve and Valve Box With Riser |
| 502 | Fire Hydrant Installation |
| 503 | Single 1" Domestic Water Service for 1" Meters |
| 504 | Not Used |
| 505 | 2" Domestic Water Service Lateral |
| 506 | 4" Water Service Lateral Installation for 3" Meter |
| 507 | 4" Water Service Lateral Installation for 4" Meter |
| 508 | 6" Water Service Lateral Installation for 6" Meter |
| 509 | Not used |
| 510 | Reduced-Pressure Backflow Preventer |
| 511 | Fire Service Double Detector Check Valve |
| 512 | Not used |
| 513 | Single Combination Water Service |
| 514 | Not Used |
| 515 | Temporary Blowoff with Main Line Valve |
| 516 | Blowoff with Harness |
| 517 | Not used |
| 518 | Not used |
| 519 | Concrete Anchor Blocks for Vertical Bends |

520 Concrete Thrust Block

521 Not used

522 Not used

523 Installation of Pressure Reducing Valves

524 Not used

525 Installation of Air and Vacuum & Air Release Valve

526 Not used

527 Dirt Stop and Water Main Encasement

528 Water Main Lowering Detail

529 Water Main Installation Over Structure

530 Not used

531 Not used

# DRAFT

1. ALL MATERIAL, WORKMANSHIP, AND CONSTRUCTION DETAILS SHALL CONFORM TO THE CITY OF WILLITS, "STANDARD SPECIFICATIONS," INCLUDING ALL ADDENDA, STANDARD PLAN REVISIONS AND SPECIAL PROVISIONS.

2. START EXCAVATION BY EXPOSING END OF EXISTING MAIN TO DETERMINE ITS LINE AND GRADE. START NEW MAIN 8 - 10 FEET FROM, AND ON SAME LINE AND GRADE AS EXISTING MAIN. PIPE LAYING SHALL THEN BE ADJUSTED SO THE DEPTH OF NEW MAIN CONFORMS TO NOTE #3.

3. MINIMUM DEPTH OF COVER FROM FINISHED GRADE SHALL BE: 32" FOR 6" MAINS; 36" FOR 8" MAINS, 44" FOR 12" MAINS; AND 48" FOR 14" AND LARGER MAINS. 4" AND 10" MAINS MUST BE SPECIFICALLY APPROVED BY THE CITY ENGINEER. 4" THROUGH 16" MAIN LINE VALVES SHALL BE RESILIENT SEAT GATE. 18" AND LARGER MAINLINE VALVES SHALL BE BUTTERFLY VALVES. BLOW OFF VALVES SHALL BE 2" OR 3" BALL VALVES WITH ROTATION STOPS.

4. NO. 10 INSULATED COPPER WIRE SHALL BE LAID ON TOP OF AND ALONG ENTIRE LENGTH OF ALL MAINS AND SERVICES, AND SHALL BE EXTENDED TO THE SURFACE AT ALL VALVE LOCATIONS, BLOWOFFS AND METER BOXES SUFFICIENT FOR LOCATOR EQUIPMENT TO BE ATTACHED. FASTEN THE WIRE TO THE TOP OF THE PIPE SO AS NOT TO BE DISPLACED BY BACKFILLING PROCEDURE (ONE METHOD OF ACCOMPLISHING THIS IS TO AFFIX THE WIRE TO THE TOP OF THE PIPE WITH DUCT TAPE AT APPROXIMATELY 10 FEET INTERVALS).

5. MAINS TO BE CONSTRUCTED WITHIN 5' OF SEWER PIPE REQUIRE SPECIAL INSTALLATION AND DESIGN MUST BE SPECIFICALLY APPROVED BY THE CITY ENGINEER.

6. ALL TRENCHING, BACKFILL AND RESURFACING REQUIRED FOR INSTALLATION OF WATER SYSTEM FACILITIES SHALL BE PER CITY STANDARD 300.

7. ONLY CITY PERSONNEL SHALL OPERATE VALVES ON EXISTING WATER MAINS OR WATER SERVICES.

8. SERVICE LATERALS OTHER THAN THOSE SHOWN OR NOTED ON THE PLANS SHALL NOT BE INSTALLED PRIOR TO OBTAINING CITY APPROVAL.

9. UNLESS OTHERWISE SHOWN ON THE PLANS, 1" WATER SERVICE LATERALS FOR 1" METER INSTALLATIONS AND SHALL BE INSTALLED IN RESIDENTIAL DEVELOPMENTS AND 2" OR LARGER WATER SERVICE LATERALS SHALL BE INSTALLED IN COMMERCIAL DEVELOPMENTS. WHERE SERVICE LENGTHS ARE OVER 40 FEET FROM METER TO MAIN LINE, 1" SERVICE LATERALS SHALL BE USED. FOR SERVICE LENGTHS OVER 60 FEET, 1-1 1/2" SERVICE LATERAL SIZE SHALL BE APPROVED BY THE CITY ENGINEER PRIOR TO PLACEMENT.

10. NO MORE THAN ONE WATER SERVICE SHALL BE PLACED WITHIN A TRENCH.

11. WATER AND SEWER SERVICE LATERALS SHALL BE SEPARATED HORIZONTALLY BY A MINIMUM OF 5 FEET.

12. AT THE LOCATION OF EACH WATER SERVICE LATERAL, THE LETTER "W" SHALL BE INSCRIBED INTO THE FACE OF THE CURB. THE LETTER "W" SHALL BE 4" HIGH AND COMPLETELY LEGIBLE.

13. ALL WATER SERVICE POLY TUBING SHALL BE GOLD LABEL, 200 PSI, IPS SIZE 1 1/2-2 INCH CTS.



| | | | | | |
|---|---|---|---|---|---|
| CITY OF WILLITS | WATER MAIN CONSTRUCTION NOTES | | | | STD. NO. 500 |
| | SCALE: NONE | DRAWN: TM | CHK: TM | APPVD: Thomas M Mannatt | DATE: OCT 2009 |

DRAFT

14. ALL METER BOXES, VAULTS AND PITS SHALL BE BEDDED ON 3" MINIMUM THICK, 3/4" DRAIN ROCK, AB-2, OR OTHER CLEAN MATERIAL WITH TYPICAL SAND EQUIVALENT OF 20 MINIMUM, UNCONTAMINATED BY NATIVE SOIL, AGAINST COMPACTED OR UNDISTURBED BASE. THE GRAVEL BED SHALL EXTEND TO A 4" MINIMUM BEYOND ALL SIDES OF THE METER BOX. BOX SHALL BE SET FLUSH WITH TOP OF CURB, SIDEWALK OR GROUND, WHICHEVER IS APPLICABLE. LOT NUMBERS MUST BE NOTED ON TOP SIDE OF METER BOX WITH A PERMANENT MARKING PEN.

15. METER BOXES SHALL BE LOCATED OUT OF TRAFFIC LOADING AREAS WHENEVER POSSIBLE.

16. METER BOXES AND VAULTS SHALL BE SET SO THAT THE READING LIDS ARE ALIGNED OVER THE METER REGISTERS AS CLOSELY AS POSSIBLE.

17. UNLESS OTHERWISE APPROVED BY THE CITY ENGINEER, THE WATER SERVICE LINE SHALL BE THE SAME SIZE AS THE WATER METER, 1" FOR 3/4 AND 1" METERS, OR 3/4" FOR DUPLEX.

18. ITEMS SPECIFIED ON THE STANDARD PLANS, OR THE ENGINEER'S APPROVED LIST, ARE APPROVED FOR USE BY THE CITY ENGINEER. ALL OTHERS SHALL BE SUBMITTED TO THE CITY ENGINEER FOR APPROVAL.

19. METER MANIFOLDS MUST BE DETAILED AND APPROVED BY THE CITY ENGINEER. IN GENERAL, MANIFOLDS WHERE ALL FITTINGS ARE 2" OR LESS, SHALL BE CONSTRUCTED FROM THREADED BRASS PIPES AND FITTINGS FROM THE END OF THE SERVICE LATERAL TO THE METER CONNECTION. NO PLASTIC PIPE SHALL BE USED IN CONSTRUCTING MANIFOLDS OF ANY SIZE. NO MORE THAN SIX METERS MAY BE MANIFOLDED OFF A SINGLE WATER SERVICE LATERAL, WITH NO MORE THAN 3 ON EITHER SIDE OF THE SERVICE.

20. GASKETS FOR FLANGE FITTINGS SHALL CONFORM TO AWWA STD. C115.

21. TO ABANDON A WATER SERVICE, EXPOSE AND TURN OFF CORPORATION STOP, THEN SEVER THE LATERAL CONNECTION.

22. THERE SHALL BE NO UNMETERED CONNECTIONS TO THE CITY OF WILLITS WATER SYSTEM, INCLUDING CONNECTIONS BYPASSING METER FOR TESTING ON-SITE PLUMBING OR FOR OBTAINING CONSTRUCTION WATER. PRESSURE TESTING AGAINST VALVES WILL NOT BE ALLOWED. WHEN A SUBDIVISION WATER MAIN HAS BEEN ACCEPTED AND TIED-IN, THE INDIVIDUAL CURB STOPS WILL BE LOCKED OFF WITH CABLE TIES. CUTTING OFF OR TAMPERING WITH THE CABLE TIES WILL CONSTITUTE A STRAIGHT TIE-IN CONNECTION. SUCH CONNECTIONS WILL BE SEVERED BY THE CITY AND WILL RESULT IN PENALTIES INCLUDING PAYMENT OF FINES AND ESTIMATED WATER USAGE FEES.

23. BEFORE COMBUSTIBLE MATERIALS MAY BE STORED OR CONSTRUCTED ON SITE, THE FIRE DEPARTMENT MUST APPROVE FIRE FLOW AND ACCESS. BEFORE A FIRE HYDRANT MAY BE PLACED IN SERVICE, A HIGH VELOCITY FLUSHING OF THE HYDRANT LATERAL SHALL BE WITNESSED AND APPROVED BY CITY PERSONNEL. HIGH VELOCITY FLUSHING SHALL CONSIST OF REMOVING THE HYDRANT AND REPLACING IT WITH A SUITABLE ELBOW AND DIFFUSER. UNDER CITY SUPERVISION, THE HYDRANT LATERAL IS FLUSHED UNTIL CITY PERSONNEL ARE SATISFIED THAT THE LINES ARE CLEAR OF DEBRIS.

24. UPON COMPLETION OF CONSTRUCTION, FINAL CONNECTION WILL BE MADE BY THE CONTRACTOR AT THE DEVELOPER'S EXPENSE UNDER INSPECTION BY A CITY REPRESENTATIVE, UNLESS OTHERWISE SPECIFIED ON THE PLANS.



| | | | | | |
|---|---|---|---|---|---|
| CITY OF WILLITS | WATER MAIN CONSTRUCTION NOTES | | | | STD. NO. 500 |
| | SCALE: NONE | DRAWN: TM | CHK: TM | APPVD: Thomas M Mannatt | DATE: OCT 2009 |

DRAFT

25. WHEN A CONNECTION IS REQUIRED TO AN EXISTING WATER MAIN, THE CONTRACTOR SHALL PROVIDE ALL EXCAVATION, SHORING, BACKFILL AND TRENCH RESURFACING PER CITY STANDARD 300. WHERE THE CONNECTION IS TO BE A "HOT TAP," THE CONTRACTOR SHALL PROVIDE AND INSTALL THE TAPPING VALVE AND SLEEVE, AND ANY OTHER HARDWARE REQUIRED AND WILL MAKE THE TAP AT THE DEVELOPER'S EXPENSE. NO HOT TAP SHALL BE MADE WITHIN 4 FEET OF A JOINT (MEASURED FROM JOINT TO CENTERLINE OF INTERSECTING PIPE). THE JOINT SHALL BE REMOVED, AND THE PROPOSED HOT TAP SHALL BE REPLACED WITH A "CUT-IN" TEE. WHEN A "CUT-IN" TEE AND VALVE(S) ASSEMBLY IS REQUIRED ON THE PLANS, THE CONTRACTOR SHALL PROVIDE AND INSTALL THE ENTIRE ASSEMBLY (INCLUDING VALVES), AND ANY OTHER HARDWARE NECESSARY UNDER CITY INSPECTION, AND SHALL PROVIDE ALL OTHER WORK AND MATERIALS NECESSARY TO COMPLETE THE INSTALLATION TO CITY STANDARDS.

26. THE CONTRACTOR SHALL COORDINATE ALL WATER MAIN CONNECTION WORK WITH THE CITY ENGINEER AT 459-4605 A MINIMUM OF 72 HOURS PRIOR TO COMMENCING WORK IN ACCORDANCE WITH CITY POLICY.

27. AFTER A STREET HAS BEEN OVERLAID, ALL WATER VALVE BOXES WILL BE MARKED IN WHITE PAINT BEFORE THE CLOSE OF THAT WORK DAY.

28. WITHIN 48 HOURS OF PAVING, ALL WATER VALVE BOXES WILL BE BROUGHT TO GRADE AND INSPECTED

29. ALL FIRE HYDRANT FLOW TESTING PERFORMED ON CITY FIRE HYDRANTS SHALL BE PERFORMED BY THE CITY OF WILLITS PUBLIC WORKS DEPARTMENT. THOSE DESIRING FLOW TESTS SHALL NOTIFY THE CITY ENGINEER. PRIOR TO TESTING AND ACCEPTANCE OF HYDRANTS, BURLAP SACKS SHALL BE PLACED OVER HYDRANTS.

30. FOR MORE THAN FOUR (4) METERS, CONFIGURATION SHALL BE APPROVED BY CITY ENGINEER.



| | | | | | |
|---|---|---|---|---|---|
| CITY OF WILLITS | WATER MAIN CONSTRUCTION NOTES | | | | STD. NO. 500 |
| | SCALE: NONE | DRAWN: TM | CHK: TM | APPVD: Thomas M Mannelli | DATE: OCT 2009 |

## STEM EXTENSION FABRICATION NOTES:

1. ALL WELDS TO RISER SHAFT SHALL BE FILLET WELD ALL AROUND.
2. ALL STEEL REQUIRED FOR RISER FABRICATION SHALL BE STRUCTURAL STEEL PER ASTM A36.

## VALVE STEM EXTENSION PARTS LIST:

1. VALVE OPERATING NUT OR 1 7/8" X 1 7/8" X 2" HIGH, SOLID STEEL WELDED TO TOP PLATE.
2. 3/16" THK. X 7" DIA. FREE SPINNING GUIDE PLATE WITH 3 5/8" DIA. HOLE IN CENTER.
3. TWO 3/16" X 1 1/2" X 1 1/2" X 5" LONG STEEL ANGLE WELD TO TWO SIDES OF RISER SHAFT.
4. 2 1/2" X 3/16" SQUARE STEEL TUBING, LENGTH AS REQUIRED. EDGE WELD TO TOP PLATE.
5. 3" X 3" X 1/4" STEEL TOP PLATE. WELD TO RISER SHAFT AFTER GUIDE PLATE IS IN PLACE.
6. 2" X 2" X 1/4" STEEL BASE PLATE. WELD EDGE TO STEEL TUBING.
7. 2" X 2" X 3/16" SQ. STRUCTURAL STEEL TUBING 3" LONG TO FIT OPERATING NUT.

## NOTES:

1. IF VALVE IS INSTALLED SO THAT THE TOP OF THE OPERATING NUT IS LESS THAN 30" BELOW FINISHED GRADE, THE VALVE STEM RISER IS NOT REQUIRED.
2. VALVES 2" THROUGH 10" SHALL BE RESILIENT WEDGE GATE VALVES AND VALVES 12" AND LARGER SHALL BE BUTTERFLY VALVES (SEE STD 522) UNLESS OTHERWISE APPROVED BY THE CITY.
3. ALL EXTERNAL BOLTS AND NUTS ON VALVES SHALL BE DUCTILE IRON. VALVE ASSEMBLY SHALL NOT BE POLY WRAPPED.
4. SEE STD. 500 FOR GENERAL CONSTRUCTION NOTES.
5. NOTE ON DRAWING: "VALVE EXTENSIONS MUST BE INSTALLED PRIOR TO FINAL INSPECTION".
6. GATE VALVE ILLUSTRATED. SIMILAR INSTALLATION REQUIRED FOR BALL VALVES & BUTTERFLY VALVES.

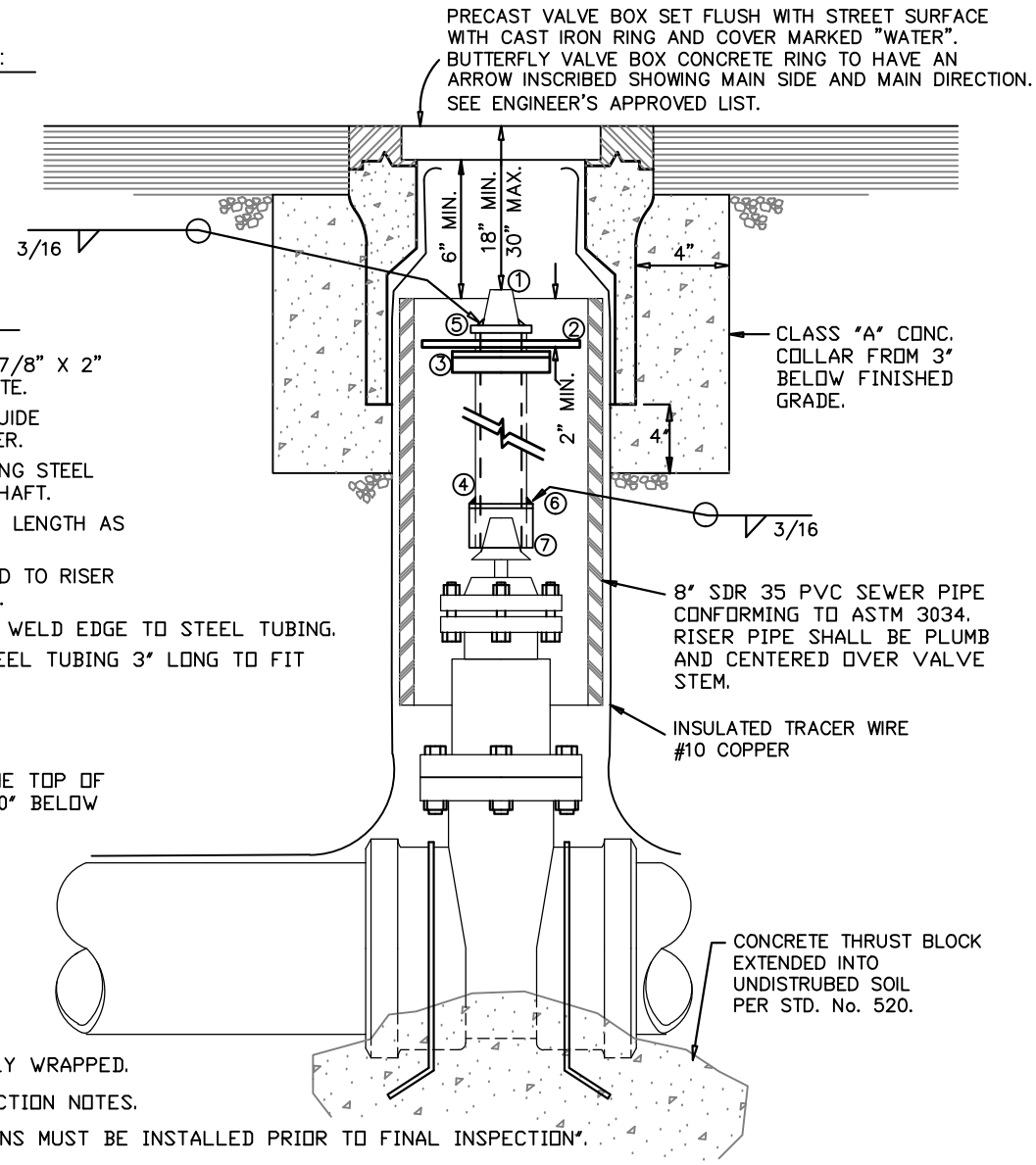


DRAFT

CITY OF WILLITS

# GATE VALVE AND VALVE BOX WITH RISER

SCALE: NONE | DRAWN: TM | CHK: TM | APPVD: | DATE: OCT 2009

STD. NO. 501

# FIRE HYDRANT INSTALLATION

DRAFT

NOTES:

1. PLACE ONE BLUE PAVEMENT MARKER PER HYDRANT 24" FROM ROADWAY CENTERLINE, ADJACENT TO HYDRANT.
2. CURB SHALL BE PAINTED RED FOR A TOTAL LENGTH OF 24', CENTERED AT THE HYDRANT.
3. ALL CONCRETE CLASS "A" (6 SACK).
4. WHERE NO SIDEWALK EXISTS, A 24" X 24" X 6" THICK CONCRETE PAD SHALL BE POURED AROUND THE BREAK-OFF RISER AT THE SAME RELATIVE ELEVATION AS THE SIDEWALK.

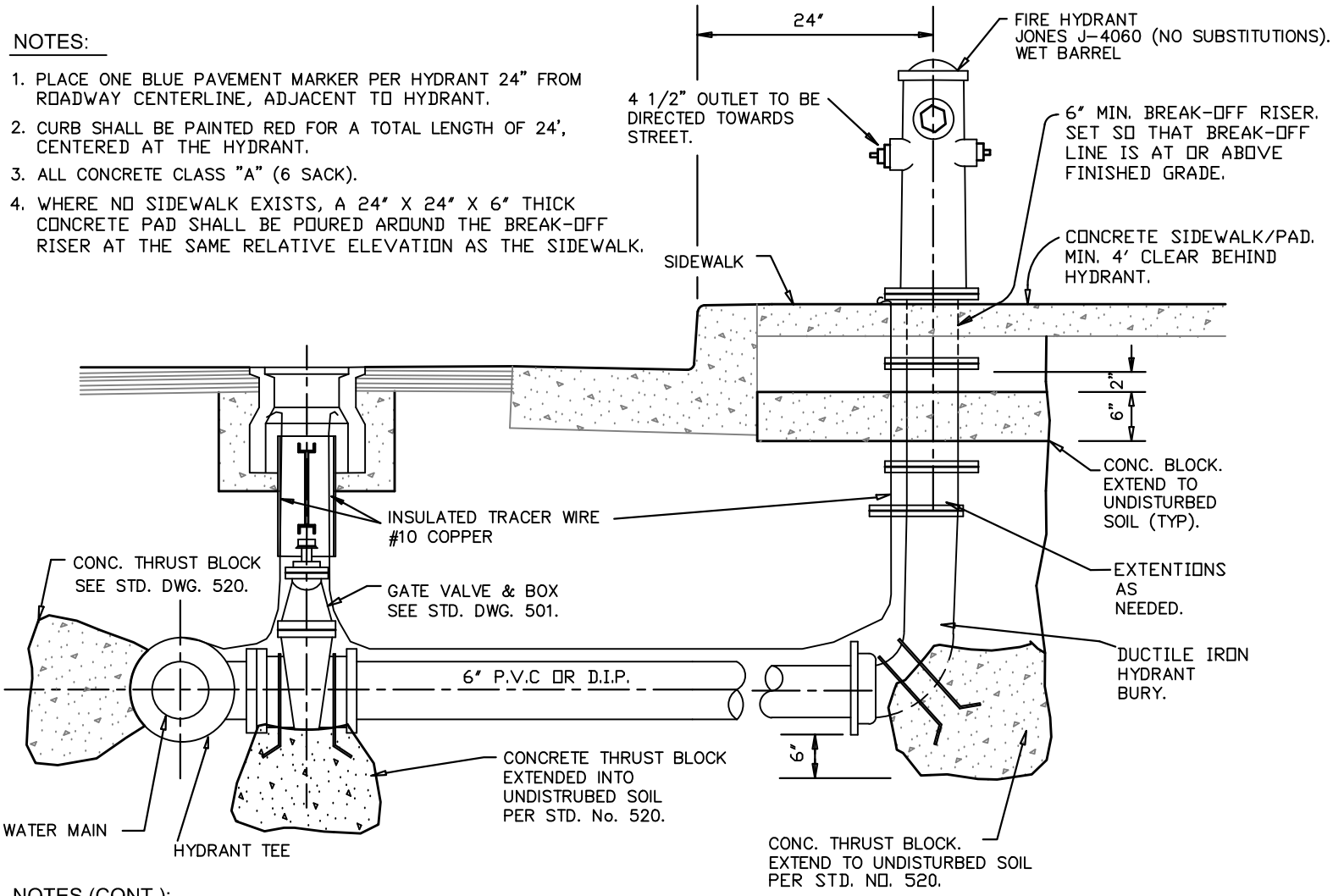


NOTES (CONT.):

6. VERIFY FIRE PROTECTION REQUIREMENTS WITH THE WILLITS FIRE PROTECTION DISTRICT.
7. INSTALL HYDRANTS 10' CLEAR OF DRIVEWAYS.
8. SEE ENGINEER'S APPROVED LIST FOR HYDRANT MODELS.
9. ALL HYDRANTS SHALL BE PAINTED "SAFETY YELLOW".
10. ALL MECHANICAL RESTRAINED JOINTS.

CITY OF WILLITS

SCALE: NONE | DRAWN: TM | CHK: TM | APPVD: | DATE: OCT 2009

STD. NO. 502

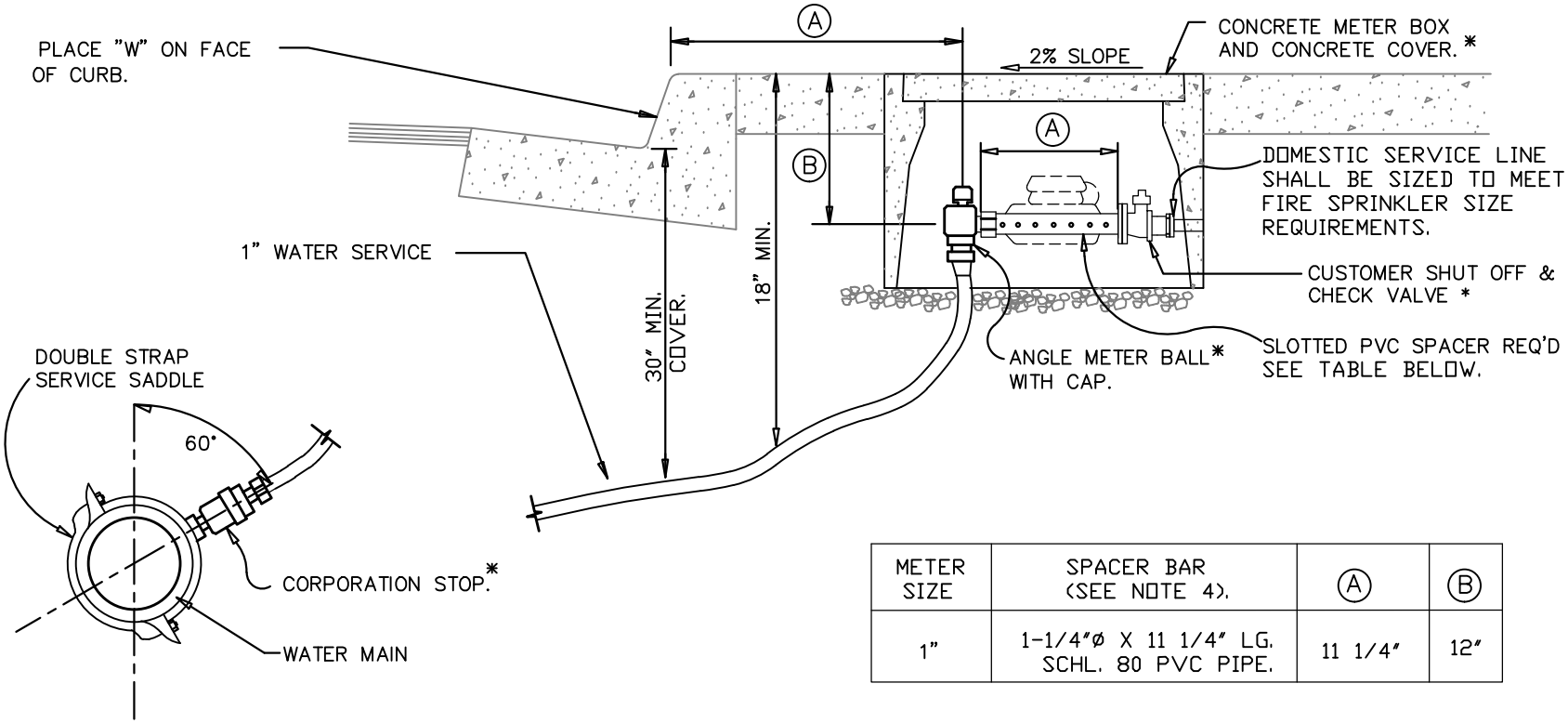


| METER SIZE | SPACER BAR (SEE NOTE 4). | A | B |
|---|---|---|---|
| 1" | 1-1/4"Ø X 11 1/4" LG. SCHL. 80 PVC PIPE. | 11 1/4" | 12" |

DRAFT

NOTES:

1. SERVICE LATERAL BEDDING MATERIAL TO BE COMPACTED TO MINIMUM 90% R.C. PRIOR TO INSTALLATION OF POLY SERVICE TUBING.
2. UNLESS OTHERWISE SPECIFIED ON THE PLANS, PROVIDE FOR 1" METER INSTALLATION FOR RESIDENTIAL USES AND 1" METER INSTALLATION FOR COMMERCIAL USES WITH SEPARATE FIRE SPRINKLER SYSTEM.
3. UNLESS OTHERWISE SPECIFIED ON THE PLANS, INSTALL 1" SERVICE TUBING FOR RESIDENTIAL USES AND 2" SERVICE TUBING FOR COMMERCIAL USES. FOR UNKNOWN COMMERCIAL USES, INSTALL 2" SERVICE PER STANDARD 505.
4. CONTRACTOR TO INSTALL SCHL. 80 PVC SPACER WITH 1/2"Ø HOLES @ 2" O.C. (VERTICALLY DRILLED THROUGH PIPE, THREAD BOTH ENDS).
5. SEE STANDARD 500 FOR CONSTRUCTION NOTES.
6. METER BOX MUST BE SET FLUSH WITH TOP OF CURB OR SIDEWALK.
7. PRIOR TO METER SET, ADDRESS TO BE CLEARLY MARKED ON TOPSIDE LID OF METER BOX WITH PERMANENT FELT MARKER BY BY CONTRACTOR.
8. SEE ENGINEER'S APPROVED LIST FOR TAPPING SERVICE SADDLES.
9. SEE STD. 500, NOTE 9, FOR SERVICE SIZE REQUIREMENTS.

* - SEE ENGINEER'S APPROVED LIST.

# SINGLE 1" DOMESTIC WATER SERVICE FOR 1" METER

SCALE: NONE | DRAWN: TM | CHK: TM | APPVD: [signature] | DATE: OCT 2009

STD. NO. 503

INTENTIONALLY LEFT BLANK

| | | | | | |
|---|---|---|---|---|---|
| CITY OF WILLITS | | | | | STD. NO. 504 |
| | SCALE: NONE | DRAWN: TM | CHK: TM | APPVD: Thomas M Mannatt | DATE: OCT 2009 |

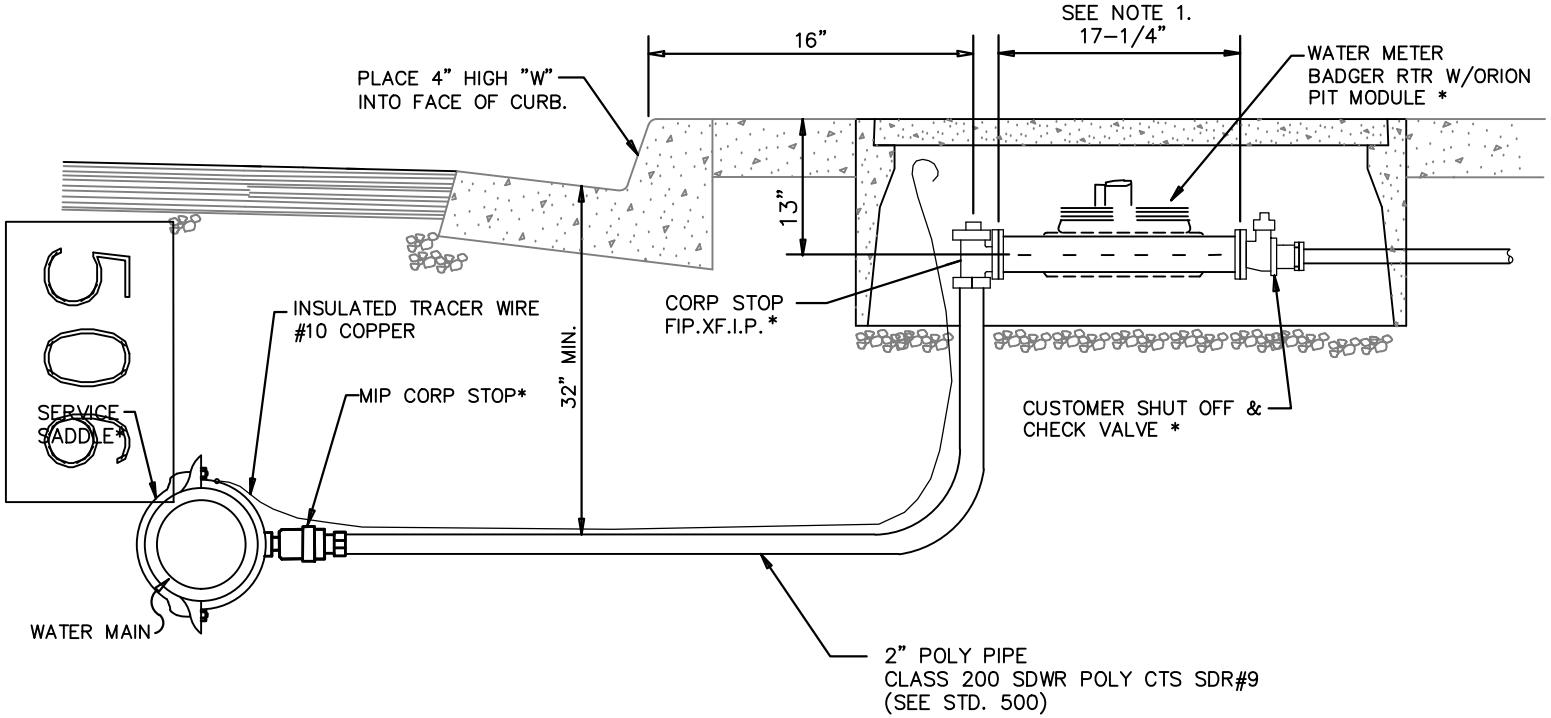


NOTES:

1. SEE STD. 500 FOR CONSTRUCTION NOTES.
2. PRIOR TO METER SET, ADDRESS SHALL BE CLEARLY MARKED ON TOP OF METER BOX WITH PERMANENT MARKER.
3. BOX PIPE KNOCKOUTS TO BE GROUTED SUFFICIENTLY TO PREVENT INTRUSION OF DIRT.
4. METERS PROVIDED AND SET BY CONTRACTOR AT DEVELOPERS EXPENSE.
5. ALL METER BOX LIDS SHALL INCLUDE A READING LID. SEE LID SPECIFICATIONS. *

* – SEE ENGINEER'S APPROVED LIST

CITY OF WILLITS

# 2" DOMESTIC WATER SERVICE LATERAL

SCALE: NONE | DRAWN: TM | CHK: TM | APPVD: | DATE: OCT 2009

STD. NO. 505

# 4" WATER SERVICE LATERAL INSTALLATION FOR 3" METER

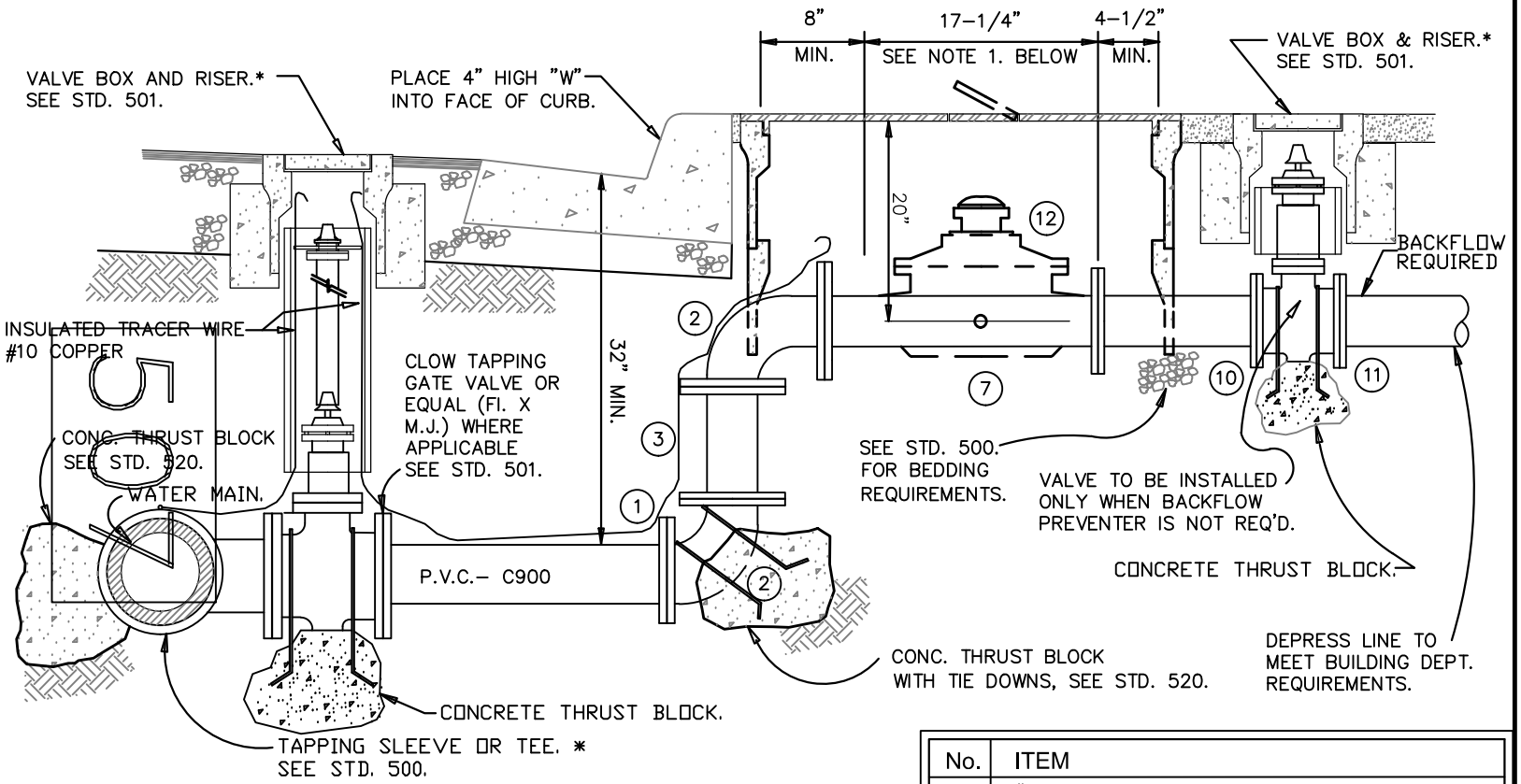


| No. | ITEM |
|---|---|
| 1 | 4" FLANGE ADAPTOR |
| 2 | 4" X 90° FLANGED ELL |
| 3 | 4" FLANGED SPOOL - LENGTH AS REQUIRED |
| 4 | |
| 5 | |
| 6 | |
| 7 | 3" x 17-1/4" SCHL 40 PVC PIPE (SEE NOTE 1) |
| 8 | |
| 9 | |
| 10 | 3" P.E. x P.E. PIECE-LENGTH AS REQUIRED |
| 11 | 3" AWWA RESILIENT WEDGE GATE VALVE (M.J.) |
| 12 | 3" METER |

NOTES:

1. SPACER SHALL BE SCHL. 40 PVC PIPE WITH 1/2" ø HOLES @ 2" O.C. (VERTICALLY DRILLED THROUGH PIPE). CITY FORCES TO REMOVE SPACER BAR & INSTALL 3" METER.
2. B40 METER BOX MUST BE SET SO THE STEEL COVER IS FLUSH WITH FINISHED SURFACE.
3. SEE STANDARD 500 FOR CONSTRUCTION NOTES.
4. PRIOR TO METER SET, ADDRESS SHALL BE CLEARLY MARKED ON TOP OF METER BOX WITH PERMANENT MARKER.
5. BOX PIPE KNOCKOUTS TO BE GROUTED SUFFICIENTLY TO PREVENT INTRUSION OF DIRT.

* - SEE ENGINEER'S APPROVED LIST

CITY OF WILLITS CC

SCALE: NONE | DRAWN: TM | CHK: TM | APPVD: | DATE: OCT 2009

STD. NO. 506

# 4" WATER SERVICE LATERAL INSTALLATION FOR 4" METER

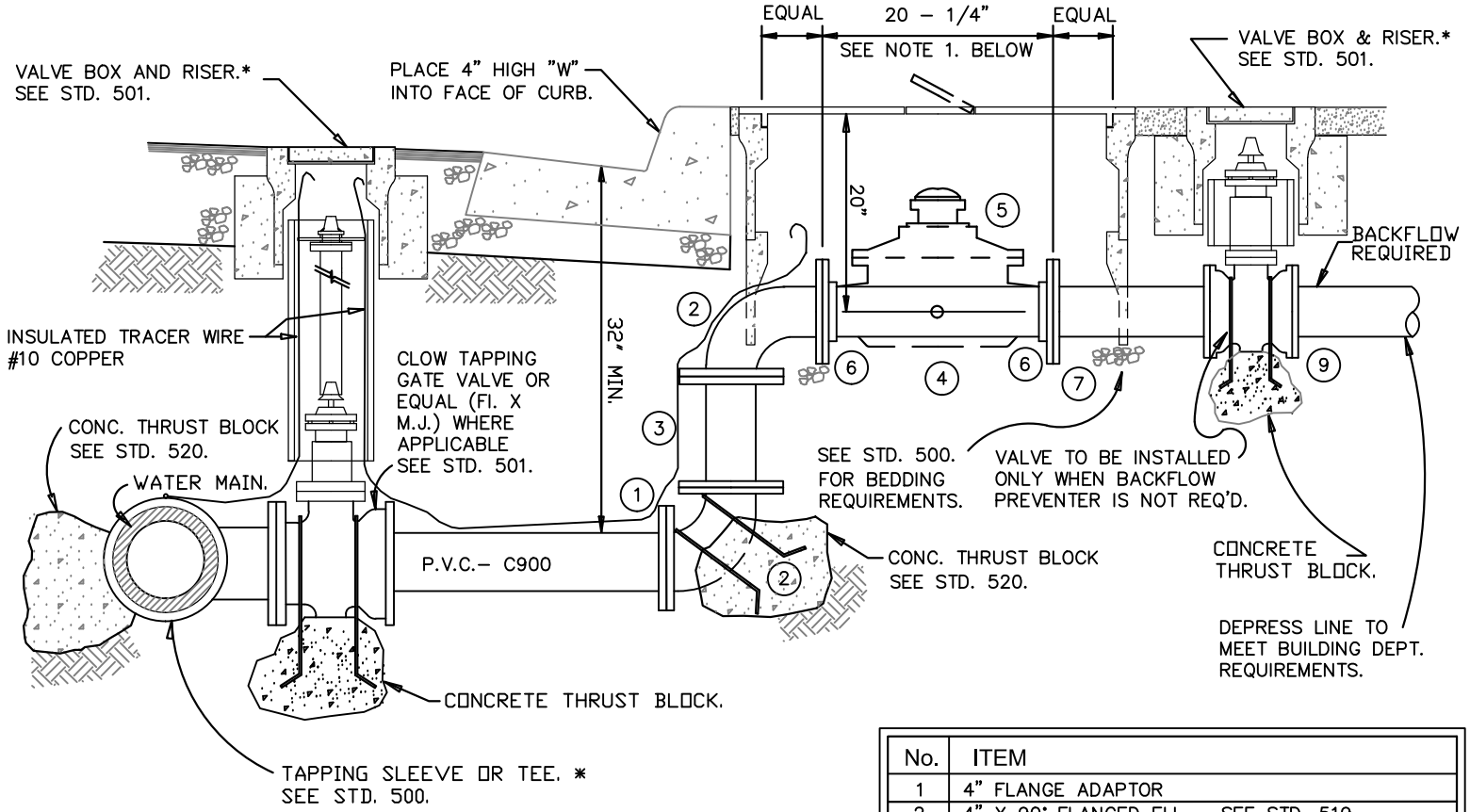


| No. | ITEM |
|---|---|
| 1 | 4" FLANGE ADAPTOR |
| 2 | 4" X 90° FLANGED ELL – SEE STD. 519. |
| 3 | 4" FLANGED SPOOL – LENGTH AS REQUIRED |
| 4 | 4" x 20–1/4" SCHL. 40 PVC PIPE (SEE NOTE 1) |
| 5 | 4" METER |
| 6 | 4" SCHEDULE 80 PVC FLANGE |
| 7 | 4" UNI–FLANGE OR FI. CPLG. ADAPTER |
| 8 | |
| 9 | 4" AWWA GATE VALVE (SEE NOTE 4) |

NOTES:

1. CONTRACTOR TO INSTALL SCHL. 40 PVC PIPE SPACER WITH 1/2" ø HOLES @ 2" O.C. (VERTICALLY DRILLED THROUGH PIPE). CITY FORCES TO REMOVE SPACER BAR & INSTALL 4" WATER METER.
2. B40 METER BOX MUST BE SET SO THE STEEL COVER IS FLUSH WITH FINISHED SURFACE.
3. SEE STANDARD 500 FOR CONSTRUCTION NOTES.
4. GATE VALVES TO BE RESILIENT SEAT TYPE PER AWWA SPECIFICATION C509 - SEE STANDARD 501.
5. PRIOR TO METER SET, ADDRESS TO BE CLEARLY MARKED ON TOP OF METER BOX WITH PERMANENT MARKER.

* - SEE ENGINEER'S APPROVED LIST

SCALE: NONE | DRAWN: TM | CHK: TM | APPVD: | DATE: OCT 2009

STD. NO. 507

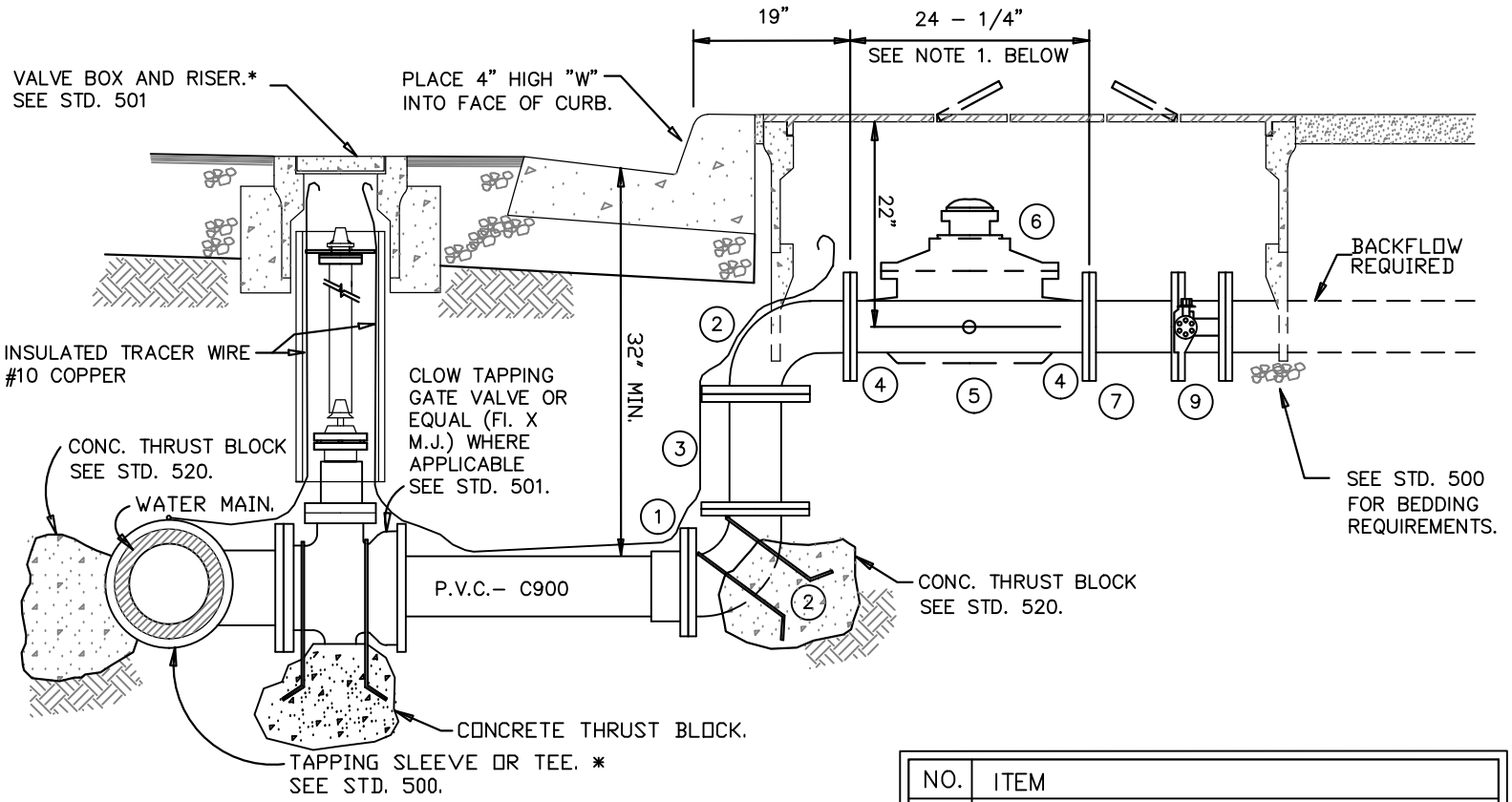


| NO. | ITEM |
|---|---|
| 1 | 6" FLANGE ADAPTOR AS REQUIRED |
| 2 | 6" X 90° FLANGED ELL |
| 3 | 6" FLANGED SPOOL – LENGTH AS REQUIRED |
| 4 | 6" SCHEDULE 80 PVC FLANGE |
| 5 | 6" x 24–1/4" SCHL. 40 PVC PIPE (SEE NOTE 1) |
| 6 | 6" TURBINE METER |
| 7 | 6" FLANGED COUPLING ADAPTER |
| 8 | |
| 9 | 6" BUTTERFLY VALVE |

NOTES:

1. METER BOX MUST BE SET SO THE STEEL COVER IS FLUSH WITH FINISHED SURFACE.
2. SEE STANDARD 500 FOR CONSTRUCTION NOTES.
3. PRIOR TO METER SET, ADDRESS TO BE CLEARLY MARKED ON TOP OF METER BOX WITH PERMANENT MARKER.

* – SEE ENGINEER'S APPROVED LIST

CITY OF WILLITS

# 6" WATER SERVICE LATERAL INSTALLATION FOR 6" METER

SCALE: NONE | DRAWN: TM | CHK: TM | APPVD: | DATE: OCT 2009

STD. NO. 508

INTENTIONALLY LEFT BLANK

| | | | | | |
|---|---|---|---|---|---|
| CITY OF WILLITS | | | | | STD. NO. 509 |
| | SCALE: NONE | DRAWN: TM | CHK: TM | APPVD: Thomas M Mannatt | DATE: OCT 2009 |

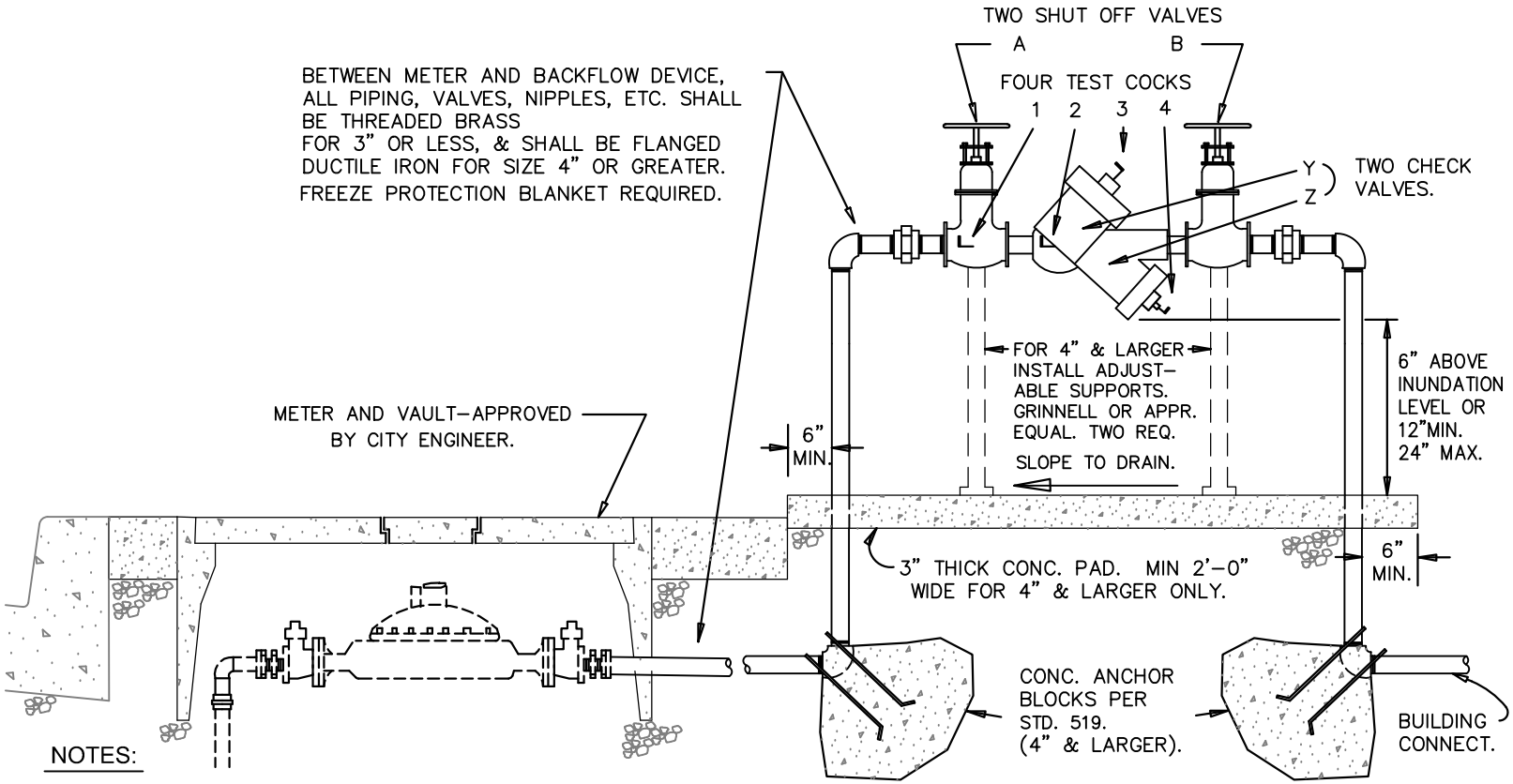


DRAFT

NOTES:

1. REDUCED PRESSURE TYPE BACKFLOW DEVICES SHALL BE REQUIRED FOR ANY USE WHERE TOXIC MATERIALS ARE USED OR STORED ON SITE OR WHERE POSITIVE PROTECTION FOR THE PUBLIC WATER SUPPLY IS REQUIRED. TYPICAL APPLICATIONS INCLUDE: ALL IRRIGATION SERVICES & PARKS, HOSPITALS, MEDICAL & DENTAL LABORATORIES, MORTUARIES, INDUSTRIAL PLANTS, DRY CLEANERS, OR AS DETERMINED BY THE CITY ENGINEER.
2. APPROVED REDUCED PRESSURE BACKFLOW DEVICE SHALL BE AS SHOWN ON "LIST OF APPROVED BACKFLOW PROTECTION DEVICES" (LATEST REVISION) BY THE UNIVERSITY OF SOUTHERN CALIFORNIA FOUNDATION FOR CROSS-CONNECTION CONTROL & HYDRAULIC RESEARCH.
3. BACKFLOW PREVENTION DEVICES SHALL BE INSTALLED ADJACENT TO AND ON PROPERTY SIDE OF SIDEWALK WHERE APPLICABLE. WHERE NO SIDEWALK EXISTS THE ASSEMBLY SHALL BE INSTALLED AS CLOSE AS POSSIBLE TO THE WATER METER LOCATION..
4. A VALVE OF THE SAME SIZE AS THE BACKFLOW PREVENTER SHALL BE INSTALLED ON EACH SIDE OF THE BACKFLOW PREVENTION ASSEMBLY. VALVES 2" & LESS SHALL BE THREADED FORD BALL VALVES. VALVES 3" SHALL BE WATTS BALL VALVES, AND 4" & LARGER SHALL BE RESILIENT SEATED GATE VALVES.
5. ANY COVER OR SCREENING FOR THE BACKFLOW PREVENTION ASSEMBLY MUST BE APPROVED BY THE CITY ENGINEER PRIOR TO INSTALLATION.
6. SEE STANDARD 500 FOR CONSTRUCTION NOTES.
7. IN LIMITED SPACE APPLICATIONS VALVES MAY BE INSTALLED ON RISERS, MIN. 4" ABOVE GRADE.
8. THE ADDITION OF SPOOLS MUST BE APPROVED BY THE CITY INSPECTOR PRIOR TO INSTALLATION.
9. THE PIPING FROM THE REDUCED PRESSURE BACKFLOW PREVENTER & THE REDUCED PRESSURE BACKFLOW PREVENTER VALVE ASSEMBLY ITSELF MUST BE THE SAME SIZE AS THE SERVICE LINE UNLESS OTHERWISE APPROVED BY THE CITY ENGINEER.

CITY OF WILLITS

# REDUCED-PRESSURE BACKFLOW PREVENTER

STD. NO. 510

SCALE: NONE | DRAWN: TM | CHK: TM | APPVD: | DATE: OCT 2009

# FIRE SERVICE DOUBLE-DETECTOR CHECK VALVE

NOTES:

1. DOUBLE – DETECTOR CHECK VALVE BACKFLOW ASSEMBLIES SHALL BE REQUIRED ON ALL PROPERTIES WITH FIRE SPRINKLER SYSTEMS, AUXILIARY WATER SUPPLY ON SITE, OR WHERE THE CITY ENGINEER DETERMINES HEALTH HAZARD.
2. APPROVED DOUBLE – DETECTOR CHECK BACKFLOW ASSEMBLIES SHALL BE AS SHOWN ON "LIST OF APPROVED BACKFLOW DEVICES" (LATEST REVISION) BY UNIVERSITY OF SO. CAL. FOUNDATION FOR CROSS CONNECTION CONTROL HYDRAULIC RESEARCH AND SHALL BE LISTED FOR USE IN FIRE SERVICES.
3. ALL RESILIENT VALVES MUST BE CHAINED AND PADLOCKED IN OPEN POSITION.
4. ALL TEST VALVES SHALL BE FITTED WITH 1/4" FEMALE TEST COCKS.
5. BYPASS METER WITH DBL. CHECK VALVE SHALL READ IN GALLON. BADGER RECORDALL MODEL 25

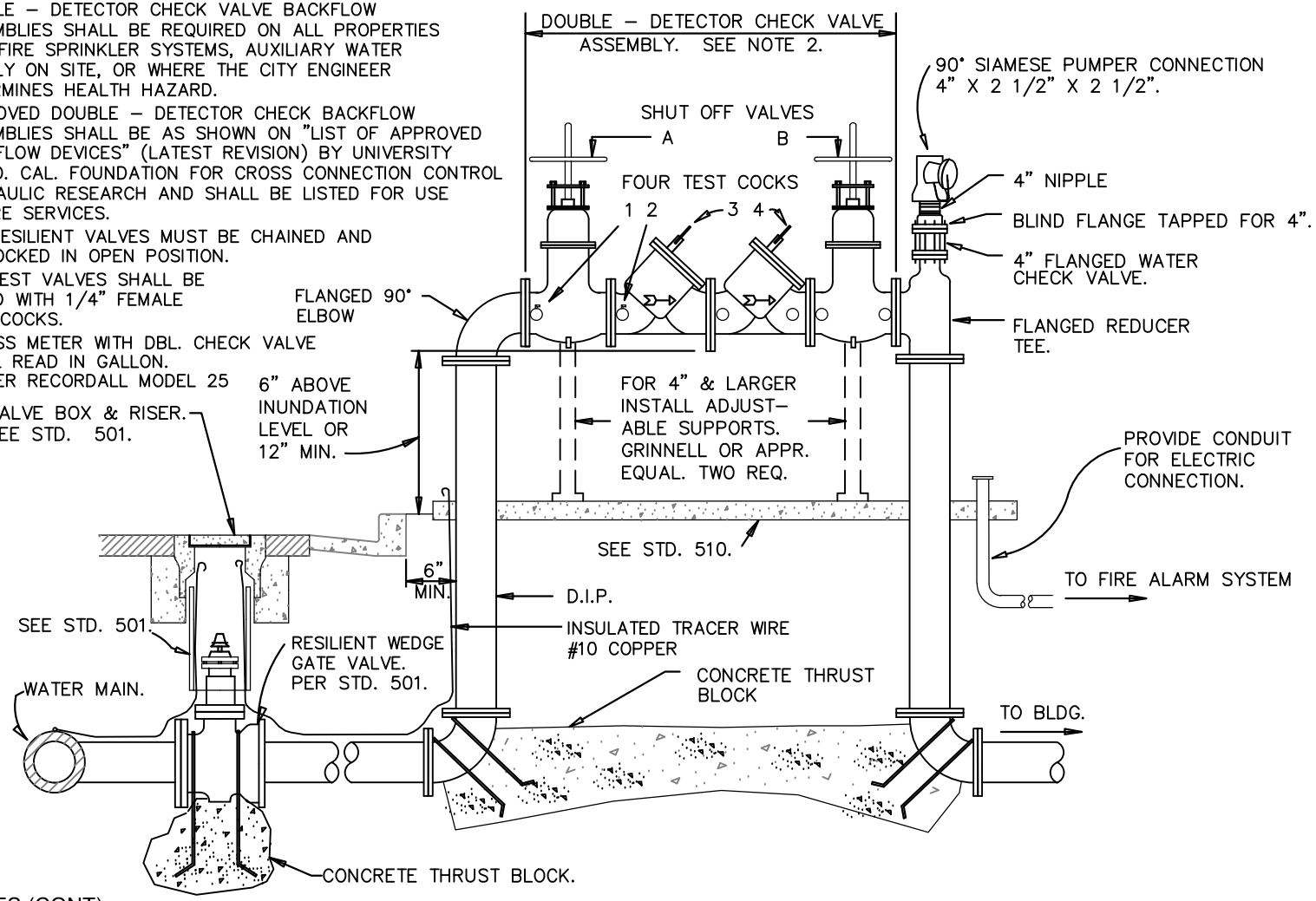


NOTES (CONT):

6. DOUBLE DETECTOR CHECK ASSEMBLY SHALL BE LOCATED AS CLOSE AS POSSIBLE TO THE SIDEWALK OR PUBLIC RIGHT-OF-WAY.
7. ANY COVER OR SCREENING FOR THIS ASSEMBLY MUST HAVE BOTH FIRE DEPARTMENT & ENGINEER'S APPROVAL PRIOR TO INSTALLATION.
8. SHUT-OFF VALVES TO BE RESILIENT WEDGE TYPE O.S. & Y.
9. MUST ALSO MEET THE REQUIREMENTS OF THE FIRE DEPARTMENT.
10. TO BE USED ONLY ON SPECIFIC APPROVAL OF THE FIRE DEPARTMENT.
11. FREEZE PROTECTION BLANKET REQUIRED.
12. SEE STANDARD 500 FOR CONSTRUCTION NOTES.

DRAFT

CITY OF WILLITS CC

SCALE: NONE | DRAWN: TM | CHK: TM | APPVD: | DATE: OCT 2009

STD. NO. 511

INTENTIONALLY LEFT BLANK

| | | | | | |
|---|---|---|---|---|---|
| CITY OF WILLITS | | | | | STD. NO. 512 |
| | SCALE: NONE | DRAWN: TM | CHK: TM | APPVD: Thomas M Mannatt | DATE: OCT 2009 |

NOTES:

1. INSTALL FIRE HYDRANT WITHIN 50 FEET OF SIAMESE PUMPER CONNECTION, AS SHOWN ON APPROVED PLANS.
2. LOCATION TO BE APPROVED BY THE CITY AND FIRE DISTRICT.
3. HYDRANT, METER, DOUBLE DETECTOR CHECK & REDUCED PRESSURE BACKFLOW PREVENTER SHALL BE LOCATED PER CORRESPONDING STANDARD Nos., 502, 503, 505, 510, 511.

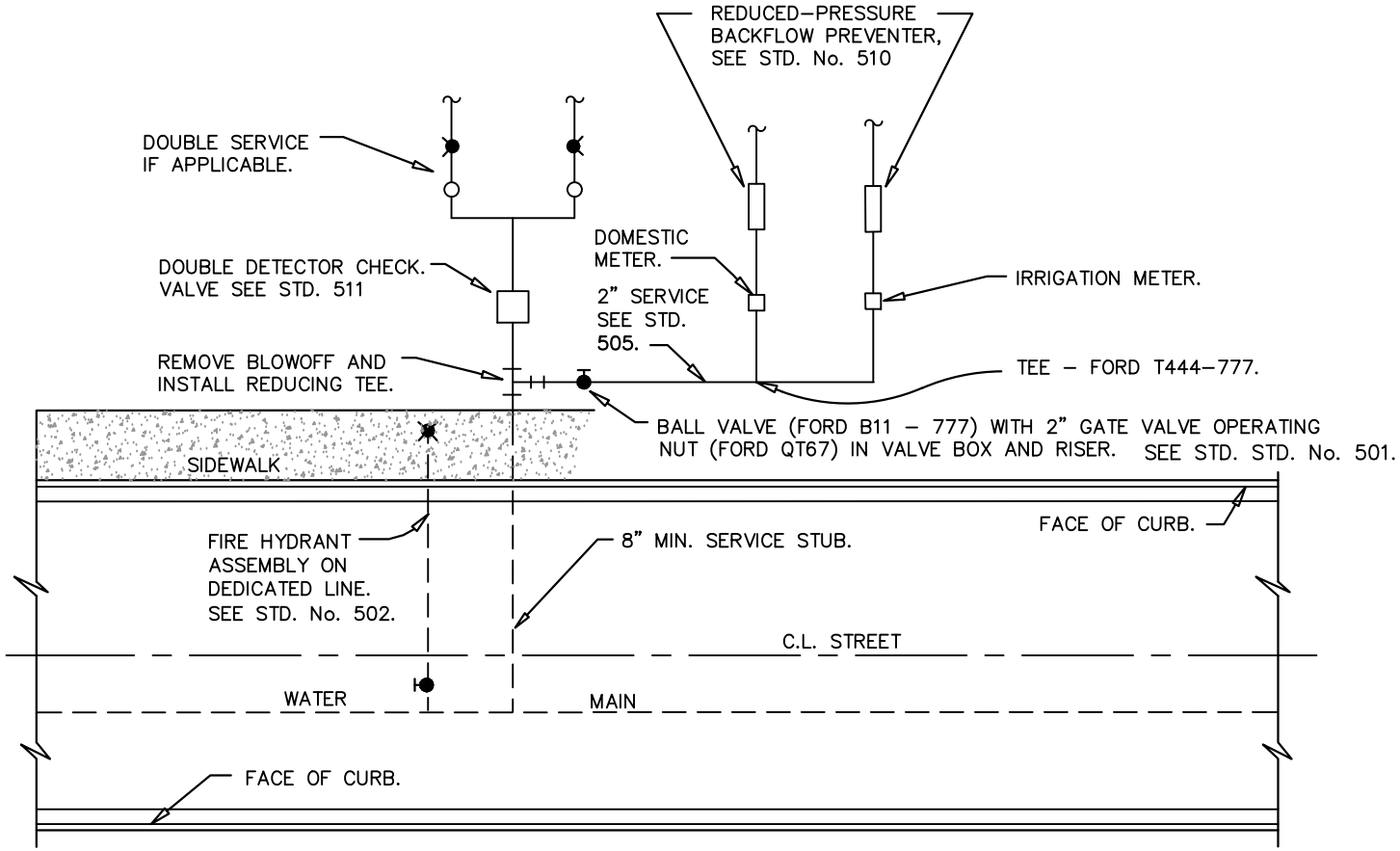


SINGLE COMBINATION WATER SERVICE

DRAFT

CITY OF WILLITS

SCALE: NONE | DRAWN: TM | CHK: TM | APPVD: | DATE: OCT 2009

SINGLE COMBINATION WATER SERVICE

STD. NO. 513

INTENTIONALLY LEFT BLANK

| | | | | | |
|---|---|---|---|---|---|
| CITY OF WILLITS | | | | | STD. NO. 514 |
| | SCALE: NONE | DRAWN: TM | CHK: TM | APPVD: Thomas M Mannatt | DATE: OCT 2009 |

# TEMPORARY BLOWOFF WITH MAIN LINE VALVE

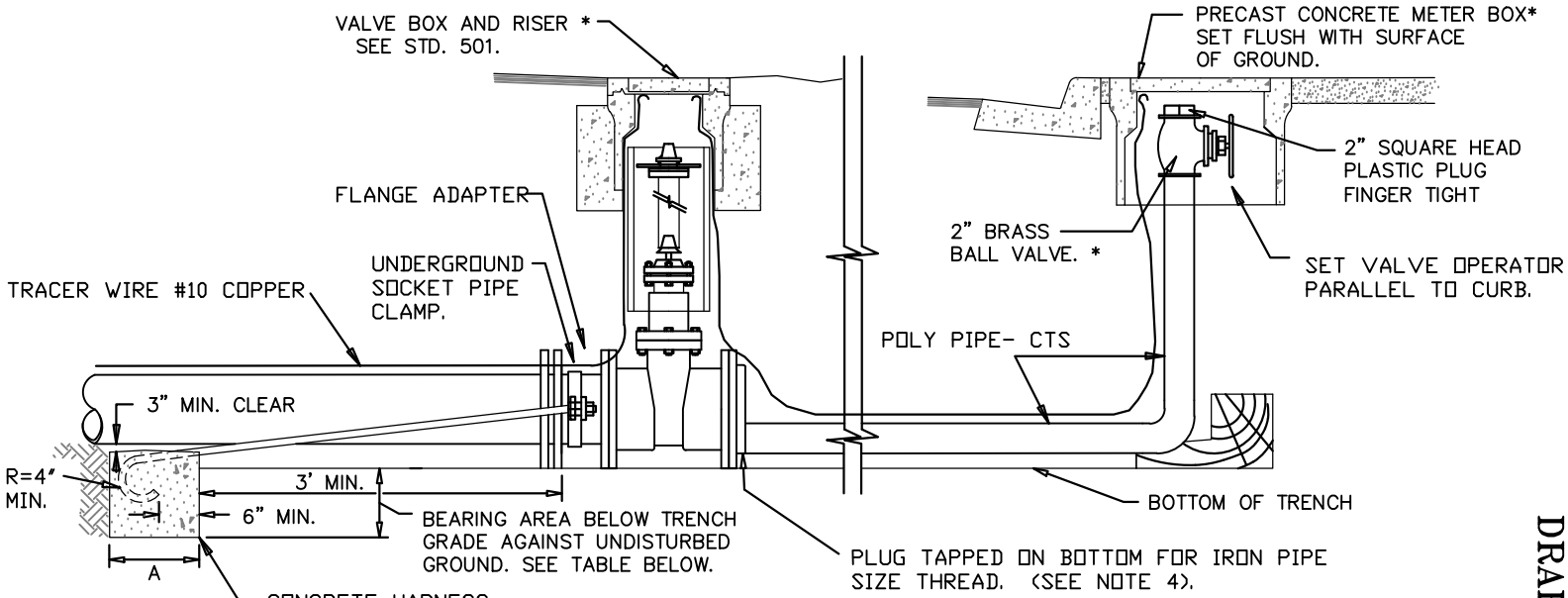


ELEVATION

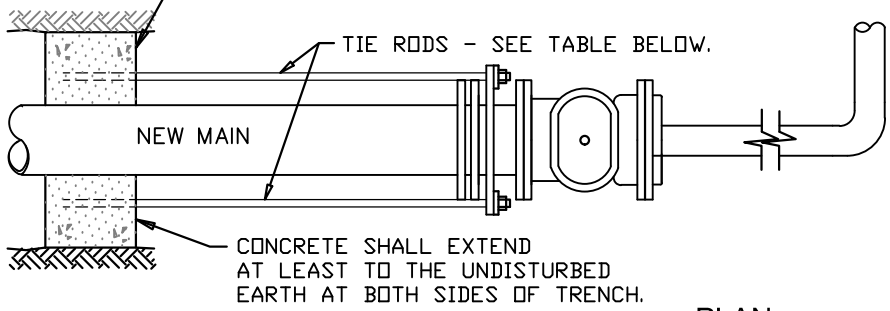


PLAN

| MINIMUM DIMENSIONS | | | | |
|---|---|---|---|---|
| PIPE SIZE | TIE RODS | BEARING AREA | A | SIZE B.O. |
| 6" | 5/8" | 4 SQ. FT. | 2' | 2" |
| 8" | 3/4" | 7 " " | 3' | 2" |
| 12" | 1 1/8" | 15 " " | 3' | 3" |
| OVER 12" | BY THE DESIGN ENGINEER | | | |

NOTES:

1. TO BE INSTALLED IN CASES WHERE MAIN MAY BE EXTENDED IN FUTURE AND NO VALVE EXISTS WITHIN 250 FEET.
2. BLOW-OFF SHALL NOT BE INSTALLED WITHIN THE TRAVELED WAY. IF THE MAIN ENDS WITHIN STREET AREA, BLOW-OFF TO BE EXTENDED TO AN AREA OUTSIDE OF THE TRAVELED WAY. LID TO BE HIGHWAY GRADE WITH LOCKDOWN CAPABILITY.
3. FOR 12" PIPE SIZE OR LARGER USE FLxFL MAIN LINE VALVE, PER STD. 502, & FLxMJ ADAPTER & MJ PLUG TAPPED AT BOTTOM FOR B.O.
4. ALL EXPOSED THREADS SHALL BE PAINTED WITH BITUMASTIC PAINT OR APPROVED SUBSTITUTE, AFTER NUTS ARE TIGHTENED.
5. IF MJxMJ GATE VALVE IS USED, RESTRAINING RODS SHALL BE RUN TO UPSTREAM GLAND AND ATTACHED WITH "DILLIE LUG" - (AKA STAR BOLT).

* - SEE ENGINEER'S APPROVED LIST

DRAFT

CITY OF WILLITS

SCALE: NONE | DRAWN: TM | CHK: TM | APPVD: | DATE: OCT 2009

STD. NO. 515

CITY OF WILLITS CC

SCALE: NONE | DRAWN: TM | CHK: TM | APPVD: | DATE: OCT 2009

# BLOWOFF WITH HARNESS

STD. NO. 516

DRAFT

## ELEVATION

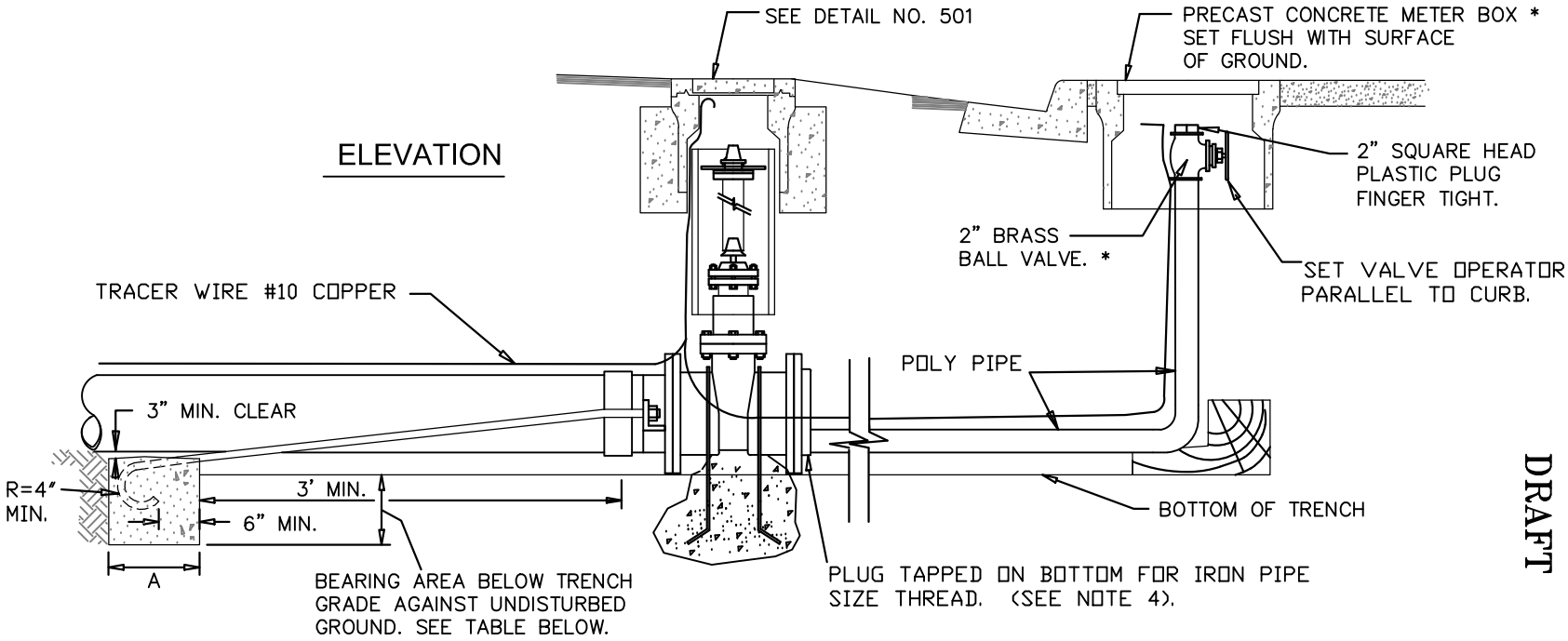


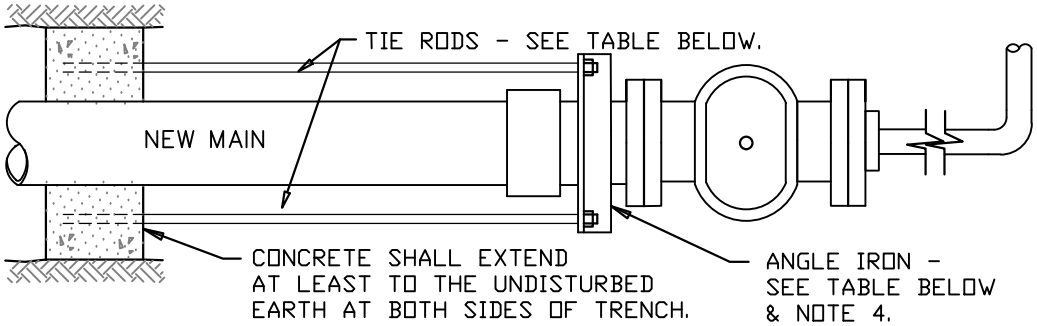


## PLAN

| MINIMUM DIMENSIONS | | | | | |
|---|---|---|---|---|---|
| PIPE SIZE | TIE RODS | ANGLE IRON | BEARING AREA | A | SIZE B.O. |
| 6" | 5/8" | 3"x3"x1/4"✱ | 4 SQ. FT. | 2' | 2" |
| 8" | 3/4" | 3-1/2"x3"x1/4"✱ | 7 " " | 3' | 2" |
| 12" | 1 1/8" | 4"x3"x1/2" | 15 " " | 3' | 3" |
| OVER 12" | BY THE DESIGN ENGINEER | | | | |

✱ SEE NOTE 4.

## NOTES:

1. SEE STD. 500 FOR CONSTRUCTION NOTES.
2. ALL EXPOSED THREADS SHALL BE PAINTED WITH BITUMASTIC PAINT OR APPROVED SUBSTITUTE AFTER NUTS ARE TIGHTENED.
3. MAINS 8" & SMALLER SHALL HAVE 2" BLOW-OFFS. MAINS 12" & LARGER SHALL HAVE 3" BLOW-OFFS. SEE TABLE BELOW.
4. FOR 6" & 8" MAINS, M.J. PLUGS WITH DILLY LUGS AND 2" CENTER TAP MAY BE USED IN LIEU OF ANGLE IRON.
5. BLOW-OFF SHALL NOT BE INSTALLED WITHIN THE TRAVELED WAY. IF MAIN ENDS WITHIN STREET AREA, BLOW-OFF TO BE EXTENDED TO AREA OUTSIDE OF TRAVELED WAY AND INSTALLED AS SHOWN ABOVE.

✱ - SEE ENGINEER'S APPROVED LIST

INTENTIONALLY LEFT BLANK

| | | | | | |
|---|---|---|---|---|---|
| CITY OF WILLITS | | | | | STD. NO. 517 |
| | SCALE: NONE | DRAWN: TM | CHK: TM | APPVD: Thomas M Mannatt | DATE: OCT 2009 |

INTENTIONALLY LEFT BLANK

| | | | | | |
|---|---|---|---|---|---|
| CITY OF WILLITS | | | | | STD. NO. 518 |
| | SCALE: NONE | DRAWN: TM | CHK: TM | APPVD: Thomas M Mannatt | DATE: OCT 2009 |

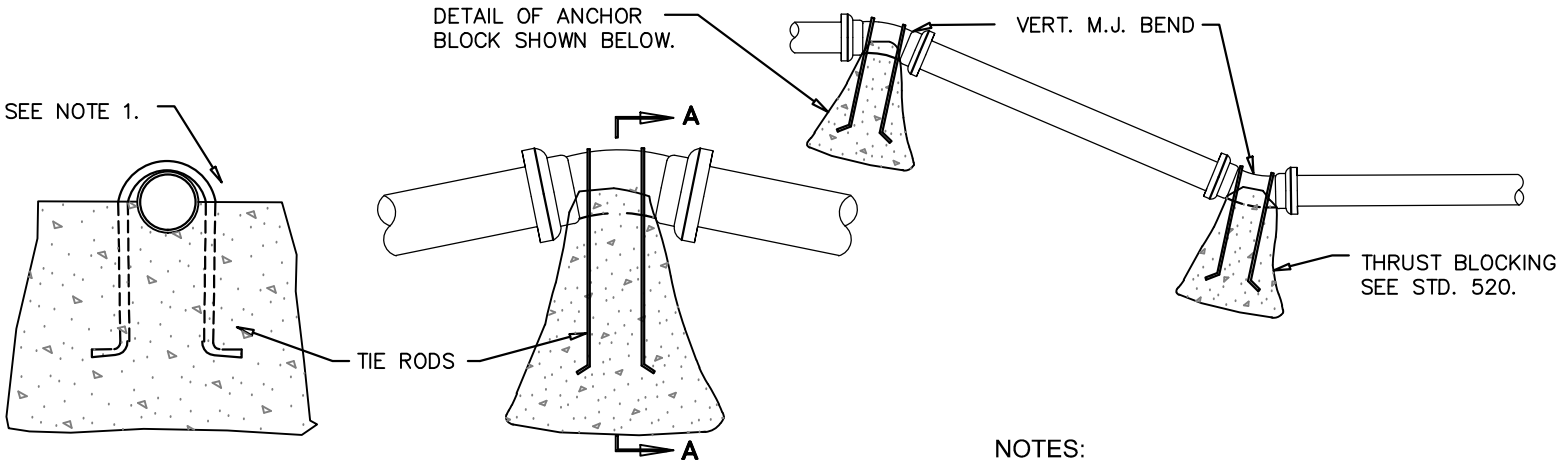


SECTION "A-A"

ELEVATION

TYPICAL CONCRETE ANCHOR BLOCK FOR VERTICAL BEND

NOTES:

1. CONCRETE ANCHOR BLOCKS SHALL BE INSTALLED BY THE CONTRACTOR TO WITHSTAND A THRUST PRODUCED BY THE TEST PRESSURE PLUS 50 P.S.I.
2. CONCRETE SHALL BE 6 SACK MIX.

DRAFT

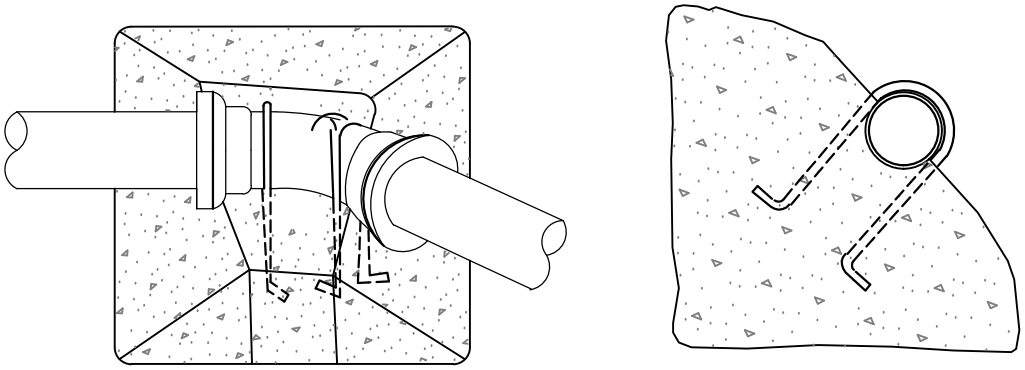

TYPICAL CONCRETE ANCHOR BLOCK FOR COMBINATION HORIZONTAL-VERTICAL BEND

CITY OF WILLITS

# CONCRETE ANCHOR BLOCK FOR VERICAL BENDS

SCALE: NONE | DRAWN: TM | CHK: TM | APPVD: | DATE: OCT 2009

STD. NO. 519

DRAFT

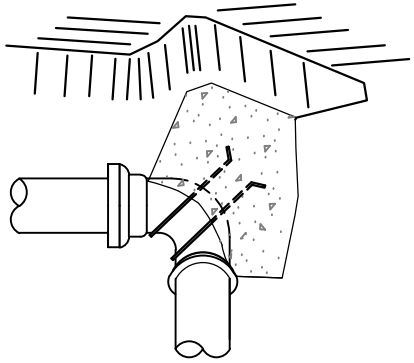

BEND

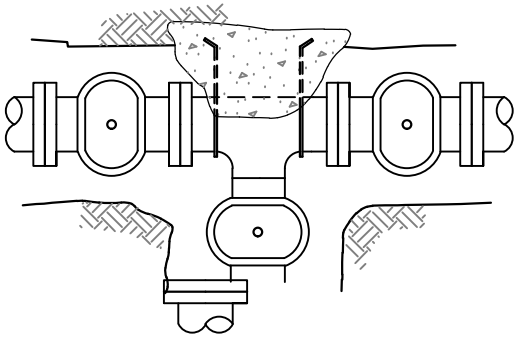

TEE

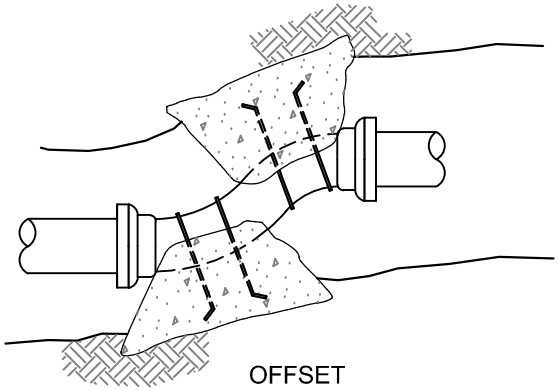

OFFSET

TYPICAL CONC. BLOCKING

SHOWN IN PERSPECTIVE

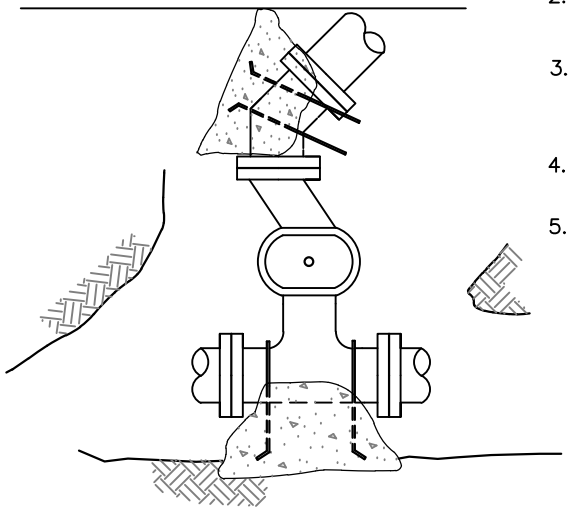

WYE

NOTES:

1. SAFE BEARING LOAD OF SOIL FOR HORIZONTAL THRUST SHALL NOT BE EXCEEDED.
2. CONCRETE BLOCKING, CAST-IN-PLACE, TO EXTEND FROM BELLS OF FITTINGS TO UNDISTURBED SOIL AND ENTIRE BEARING AREA MUST BE AGAINST UNDISTURBED SOIL.
3. IN USING THE THRUST BLOCKING TABLE BELOW, ASSUME 2000 P.S.F. BEARING CAPACITY UNLESS OTHERWISE SHOWN ON THE PLANS. THE DESIGN ENGINEER SHALL SPECIFY THRUST BLOCKING REQUIREMENTS FOR ALL OTHER SOIL BEARING CONDITIONS.
4. FOR PLUGGED LEG(S) OF TEE OR CROSS, USE HARNESS TYPE BLOCKING AS SHOWN ON STD. 516 AND CONCRETE BLOCKING INDICATED IN TABLE BELOW.
5. CONCRETE SHALL BE 6 SACK MIX.

| MIN. REQ'D BEARING AREA IN SQ. FT. PER 100 P.S.I. TEST PRESSURE * | | | | | | |
|---|---|---|---|---|---|---|
| PIPE SIZE | SOIL BEARING CAPACITY | HARNESS BLOCKS | TEES & DEAD ENDS | 90° BENDS | 45° BENDS | 22-1/2° BENDS |
| 6" | 1000<br>2000 | 4<br>2 | 4<br>2 | 6<br>3 | 3<br>2 | 2<br>1 |
| 8" | 1000<br>2000 | 7<br>4 | 7<br>4 | 10<br>5 | 5<br>3 | 3<br>2 |
| 12" | 1000<br>2000 | 16<br>8 | 16<br>8 | 22<br>11 | 12<br>6 | 6<br>3 |

* MULTIPLY NO. IN TABLE BY TEST PRESSURE & DIVIDE BY 100.

CITY OF WILLITS

# CONCRETE THRUST BLOCKS

SCALE: NONE | DRAWN: TM | CHK: TM | APPVD: [signature] | DATE: OCT 2009

STD. NO. 520

INTENTIONALLY LEFT BLANK

| | | | | | |
|---|---|---|---|---|---|
| CITY OF WILLITS | | | | | STD. NO. 521 |
| | SCALE: NONE | DRAWN: TM | CHK: TM | APPVD: Thomas M Mannatt | DATE: OCT 2009 |

INTENTIONALLY LEFT BLANK

| | | | | | |
|---|---|---|---|---|---|
| CITY OF WILLITS | | | | | STD. NO. 522 |
| | SCALE: NONE | DRAWN: TM | CHK: TM | APPVD: Thomas M Mannatt | DATE: OCT 2009 |

DRAFT

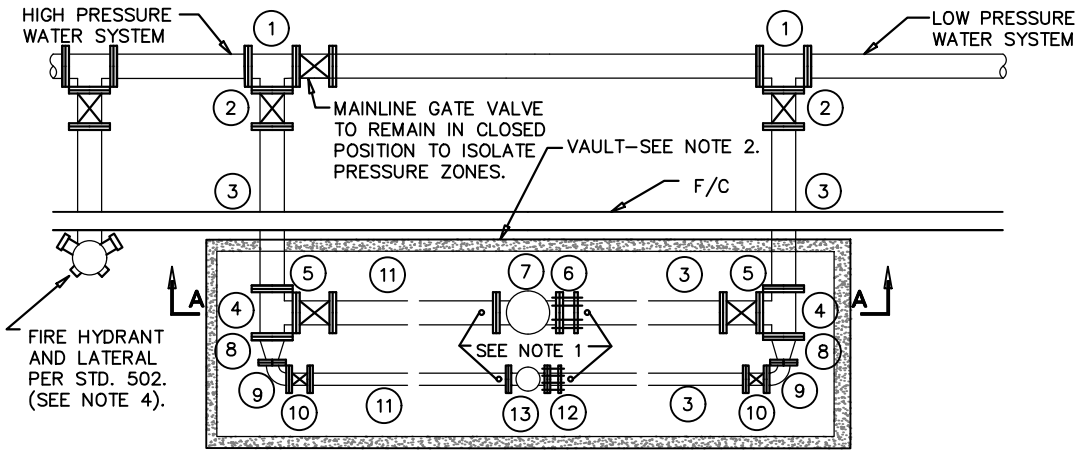


PLAN VIEW

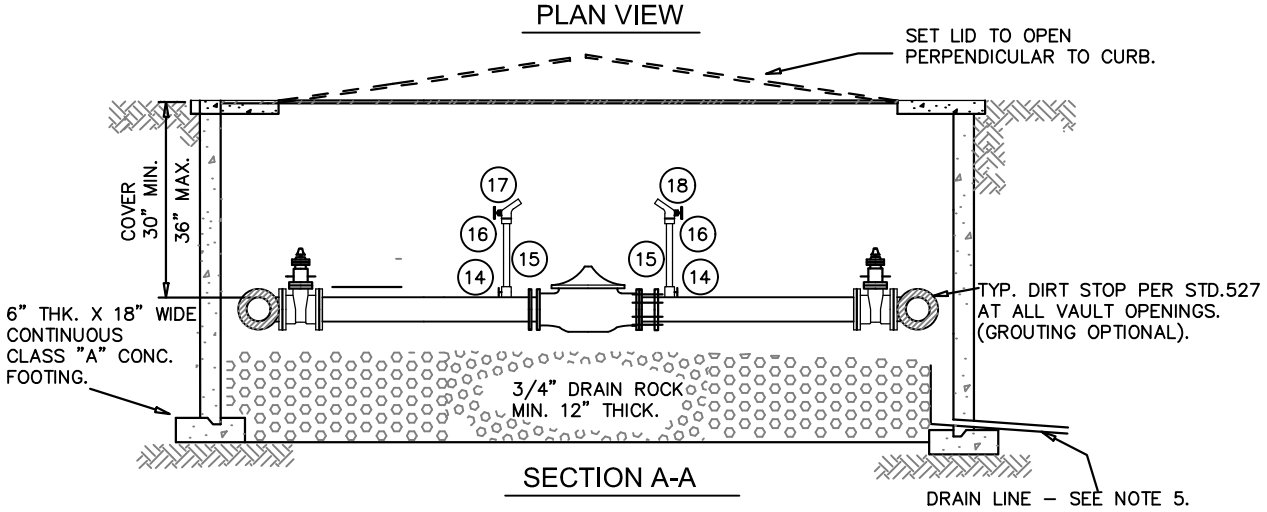


SECTION A-A

NOTES:

1. MAKE 3/4" TOP TAP – INSTALL RISER AS SHOWN FOR PRESSURE CHECKING.
2. THE PRECAST VAULT & PRESSURE REDUCING VALVES SHALL BE APPROVED BY THE CITY ENGINEER.
3. THE LOW FLOW BY–PASS (PART NUMBERS 8–13) SHALL BE INSTALLED UNLESS OTHERWISE APPROVED BY THE CITY. IF A SINGLE P.R.V. IS INSTALLED, CENTER IN VAULT AND CHANGE NUMBER 4 PARTS TO 90° FLANGED ELLS.
4. INSTALL FIRE HYDRANT ONLY WHEN REQUIRED BY THE CITY.
5. RUN 2" SCHEDULE 40 P.V.C. DRAIN PIPE FROM A PERFORATED SUMP CANISTER TO AN EXISTING DRAINAGE SYSTEM OR TO DAYLIGHT.
6. VALVES 18" AND LARGER SHALL BE BUTTERFLY VALVES. VALVES 16" AND SMALLER SHALL BE RESILIENT WEDGE GATE VALVES.
7. SEE GENERAL CONSTRUCTION NOTES.
8. ALL PRESSURE REDUCING VALVES TO BE EPOXY FUSED, INSIDE AND OUTSIDE.

PARTS LIST

| NO | ITEM |
|---|---|
| 1 | MECHANICAL JOINT TEE |
| 2 | MECHANICAL JOINT GATE VALVE |
| 3 | DUCTILE IRON PIPE – FL. X P.E. |
| 4 | FLANGED TEE |
| 5 | FLANGED GATE VALVE |
| 6 | FLANGED COUPLING ADAPTER |
| 7 | FLANGED P.R.V. – HIGH FLOW |
| 8 | FLANGED REDUCER |
| 9 | FLANGED 90° ELL |
| 10 | FLANGED GATE VALVE |
| 11 | DUCTILE IRON PIPE – FL. X FL. |
| 12 | FLANGED COUPLING ADAPTER |
| 13 | FLANGED P.R.V. – LOW FLOW |
| 14 | 3/4" BALLCORP (FORD F8 1000) |
| 15 | 3/4" TYPE "K" COPPER TUBING |
| 16 | 3/4" COMP. X F.I.P. ADAPTER (FORD C14 – 33) |
| 17 | 3/4" M.L.P. X HOSE BIBB – BRASS |
| 18 | 3/4" M.L.P. TEE WITH TWO (2) 3/4" F.I.P. X H.B. |

CITY OF WILLITS

# INSTALLATION OF PRESSURE REDUCING VALVES

STD. NO. 523

SCALE: NONE | DRAWN: TM | CHK: TM | APPVD: Thomas M Monnatt | DATE: OCT 2009

INTENTIONALLY LEFT BLANK

| | | | | | |
|---|---|---|---|---|---|
| CITY OF WILLITS | | | | | STD. NO. 524 |
| | SCALE: NONE | DRAWN: TM | CHK: TM | APPVD: Thomas M Mannatt | DATE: OCT 2009 |

DRAFT

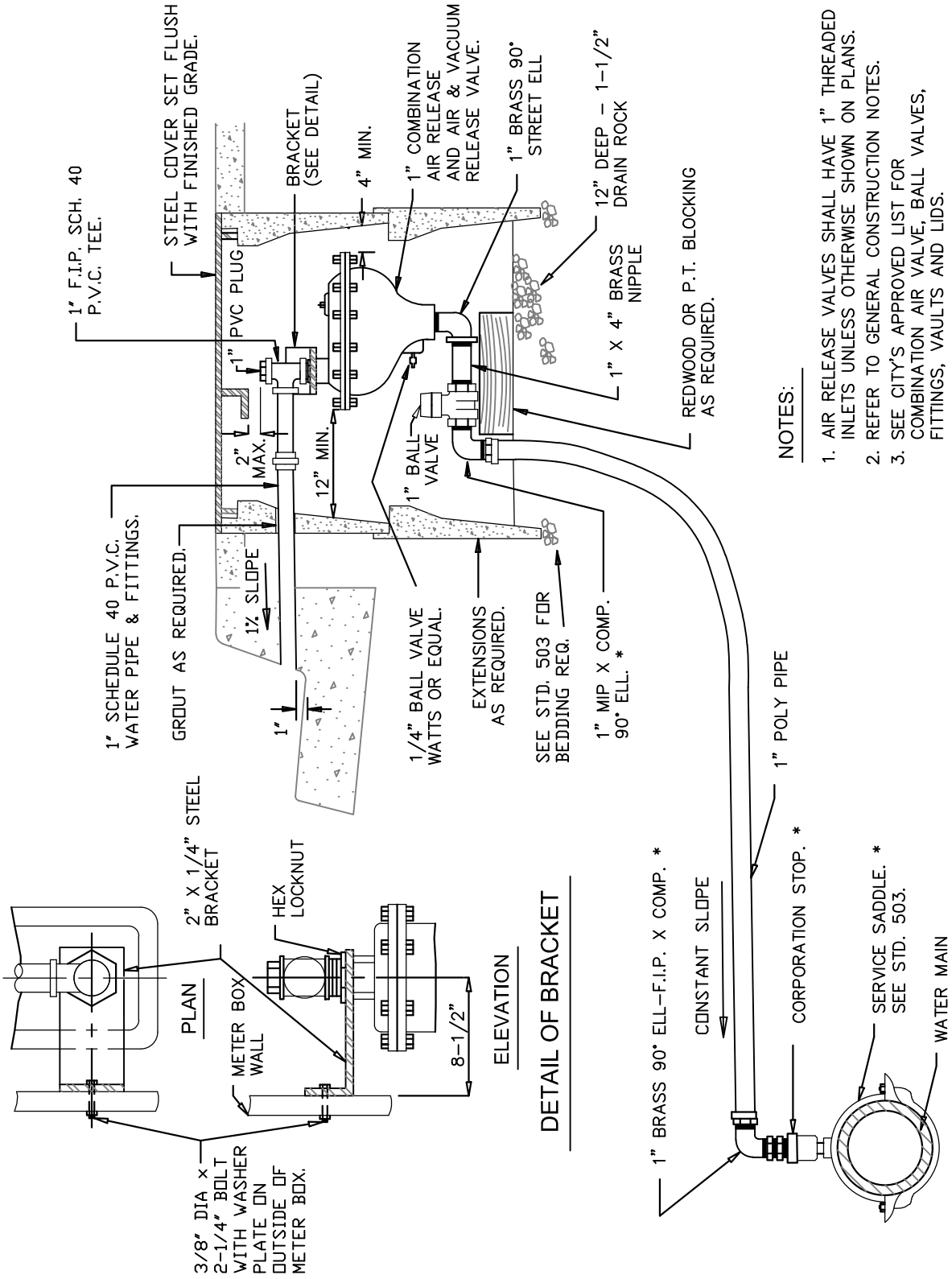


NOTES:

1. AIR RELEASE VALVES SHALL HAVE 1" THREADED INLETS UNLESS OTHERWISE SHOWN ON PLANS.
2. REFER TO GENERAL CONSTRUCTION NOTES.
3. SEE CITY'S APPROVED LIST FOR COMBINATION AIR VALVE, BALL VALVES, FITTINGS, VAULTS AND LIDS.

* – SEE ENGINEER'S APPROVED LIST.

CITY OF WILLITS

# INSTALLATION OF AIR AND VACUUM & AIR RELEASE VAVLE

STD. NO. 525

| SCALE: NONE | DRAWN: TM | CHK: TM | APPVD: Thomas M Mannatt | DATE: OCT 2009 |
|---|---|---|---|---|

INTENTIONALLY LEFT BLANK

| | | | | | |
|---|---|---|---|---|---|
| CITY OF WILLITS | | | | | STD. NO. 526 |
| | SCALE: NONE | DRAWN: TM | CHK: TM | APPVD: Thomas M Mannatt | DATE: OCT 2009 |

DRAFT

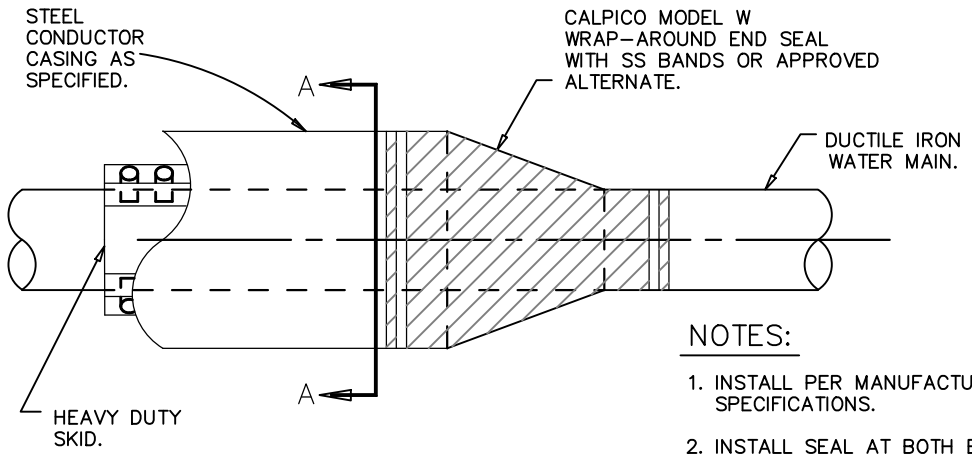


NOTES:

1. INSTALL PER MANUFACTURERS SPECIFICATIONS.
2. INSTALL SEAL AT BOTH ENDS.

DIRT STOP DETAIL

NO SCALE

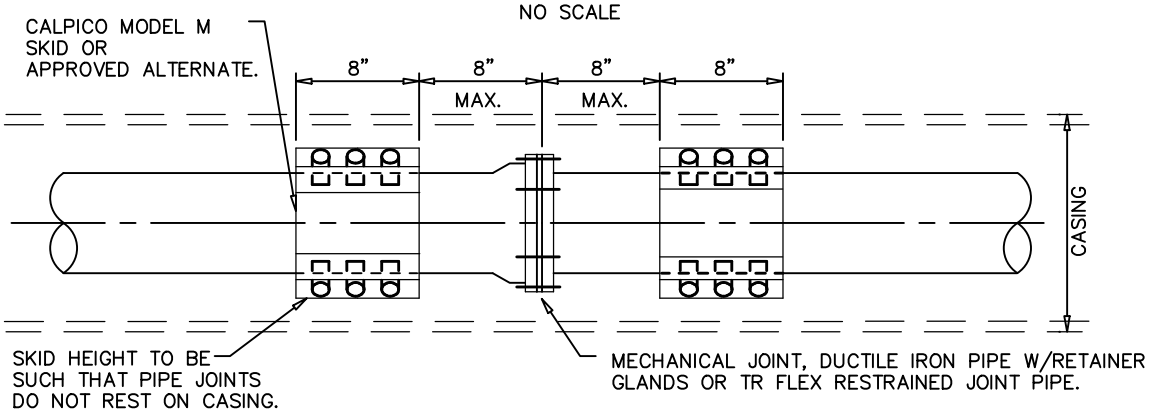


PIPE JOINT AND INSULATOR

NO SCALE

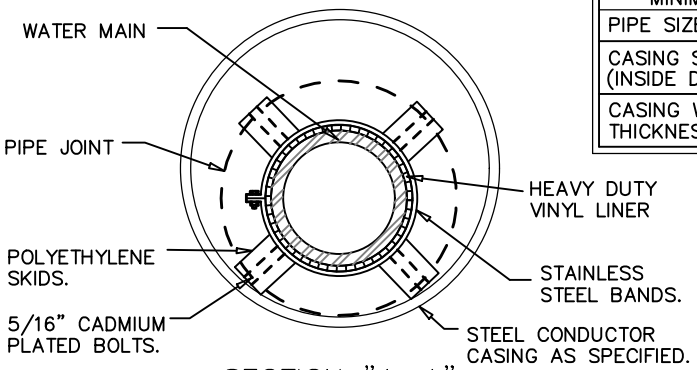


SECTION "A–A"

NO SCALE

| MINIMUM SIZE CASING REQUIRED | | | | | | | |
|---|---|---|---|---|---|---|---|
| PIPE SIZE | 6" | 8" | 12" | 14" | 16" | 18" | 20" |
| CASING SIZE (INSIDE DIA.) | 16" | 16" | 20" | 24" | 30" | 36" | 36" |
| CASING WALL THICKNESS | .375 | .375 | .375 | .375 | .500 | .560 | .560 |

NOTES:

1. INSTALL PER MANUFACTURERS SPECIFICATIONS.
2. SEE GENERAL CONST. NOTES.
3. WHERE CONDUCTOR CASING IS EXISTING R.C.P., REDWOOD SKIDS MAY BE INSTALLED IN LIEU OF POLYETHYLENE SKIDS WITH CITY APPROVAL.

CITY OF WILLITS

# DIRT STOP AND WATER MAIN ENCASEMENT

STD. NO. 527

| SCALE: NONE | DRAWN: TM | CHK: TM | APPVD: Thomas M Mannatt | DATE: OCT 2009 |
|---|---|---|---|---|

DRAFT

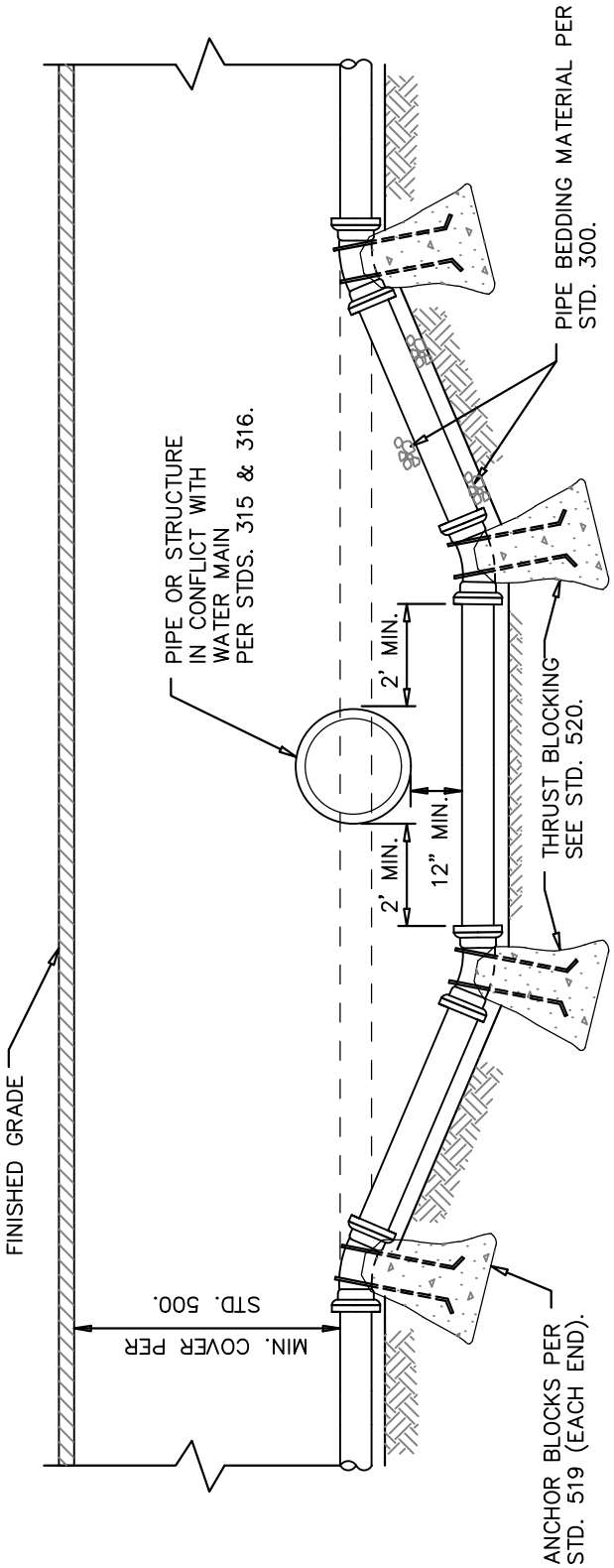


NOTES:

1. ALL PIPE & FITTINGS SHALL BE DUCTILE IRON & SHALL BE PLACED PER CITY STD. CONSTRUCTION SPECIFICATIONS.
2. ONLY MECHANICAL JOINT FITTINGS WITH RETAINER GLANDS MAY BE USED.
3. ALL BENDS SHALL BE 45° OR 22-1/2° FITTINGS.

WATER MAIN LOWERING DETAIL

| | | | | |
|---|---|---|---|---|
| CITY OF WILLITS | WATER MAIN LOWERING DETAIL | | | STD. NO. 528 |
| SCALE: NONE | DRAWN: TM | CHK: TM | APPVD: Thomas M Mannatt | DATE: OCT 2009 |

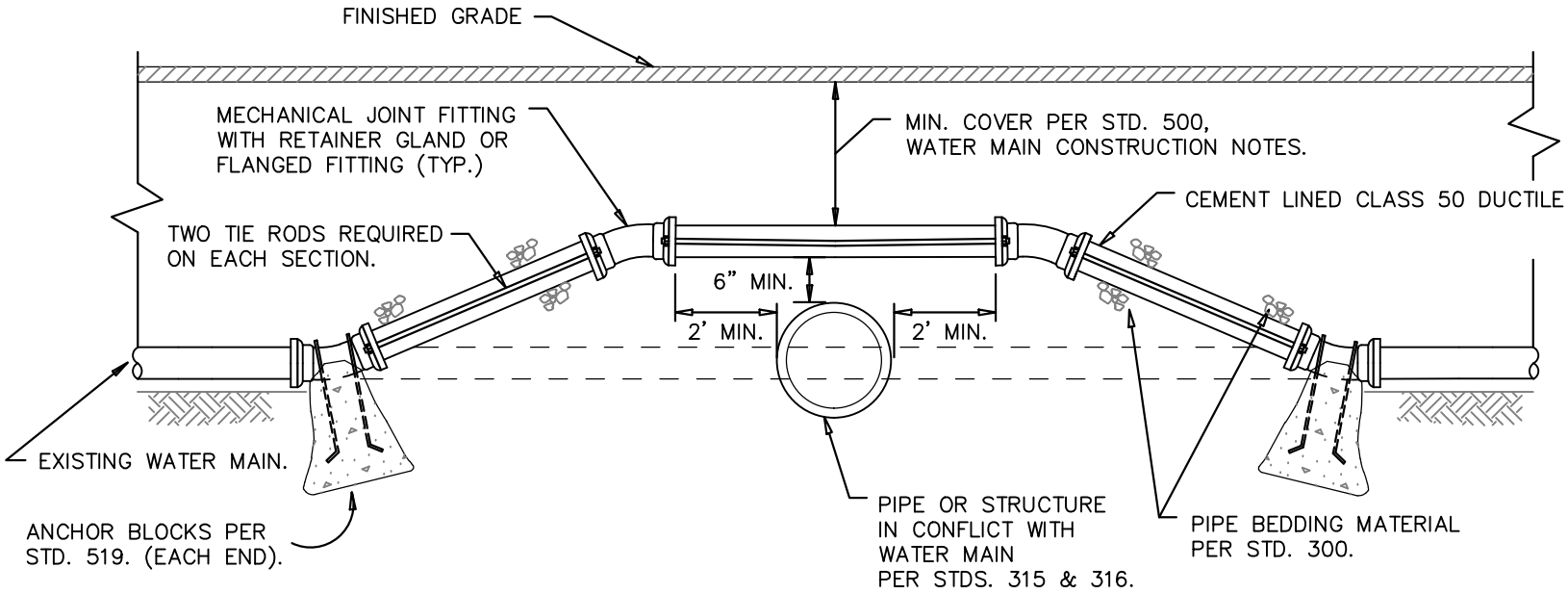


DRAFT

NOTES:

1. ALL PIPE & FITTINGS SHALL BE DUCTILE IRON & SHALL BE PLACED PER THE CITY STD. CONSTRUCTION SPECIFICATIONS.
2. ONLY MECHANICAL JOINT FITTINGS WITH RETAINER GLANDS MAY BE USED.
3. ALL BENDS SHALL BE 45° OR 22–1/2° FITTINGS – NO 90° BENDS ALLOWED.
4. TO BE USED ONLY WITH THE APPROVAL OF THE CITY ENGINEER.
5. CL. 52 DUCTILE IRON REQUIRED WHERE COVER IS LESS THAN THAT REQUIRED BY STD. 500. MINIMUM COVER, IN ANY CASE, IS 30".

| PIPE SIZE | TIE RODS |
|---|---|
| 6" | 5/8" |
| 8" | 3/4" |
| 12" | 1–1/8" |

WATER MAIN INSTALLATION OVER STRUCTURE

CITY OF WILLITS

SCALE: NONE | DRAWN: TM | CHK: TM | APPVD: | DATE: OCT 2009

WATER MAIN INSTALLATION OVER STRUCTURE

STD. NO. 529

INTENTIONALLY LEFT BLANK

| | | | | | |
|---|---|---|---|---|---|
| CITY OF WILLITS | | | | | STD. NO. 530 |
| | SCALE: NONE | DRAWN: TM | CHK: TM | APPVD: Thomas M Mannatt | DATE: OCT 2009 |

INTENTIONALLY LEFT BLANK

| | | | | | |
|---|---|---|---|---|---|
| CITY OF WILLITS | | | | | STD. NO. 531 |
| | SCALE: NONE | DRAWN: TM | CHK: TM | APPVD: Thomas M Mannatt | DATE: OCT 2009 |