EROSION CONTROL STANDARD PLANS

DESCRIPTION

800 SERIES - EROSION CONTROL

801	Stabilized Construction Site Access
802	Straw Bale Installation
803	Fabric Silt Barrier
804	Straw Bale Catch Basin Sediment Barrier
805	Straw Bale Drip Inlet Sediment Barrier
806	Erosion Blankets & Turf Reinforcement Mats Slope Protection
807	Stepped or Terraced Slope
808	Fiber Rolls
809	Sediment Basin
810	Storm Drain Drop Inlet/Catch Basin With Gravel Bags

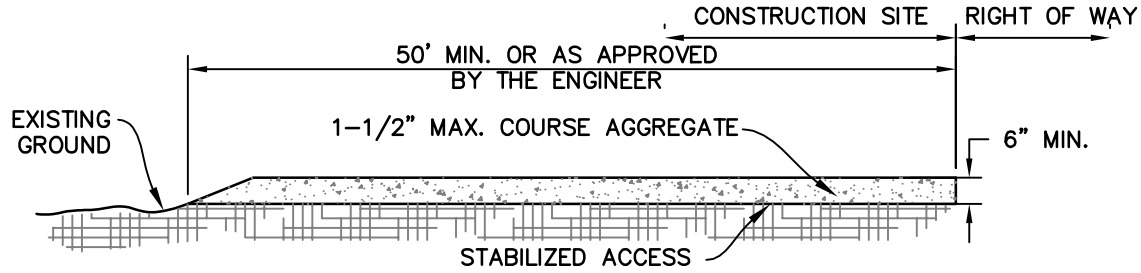

SECTION A–A

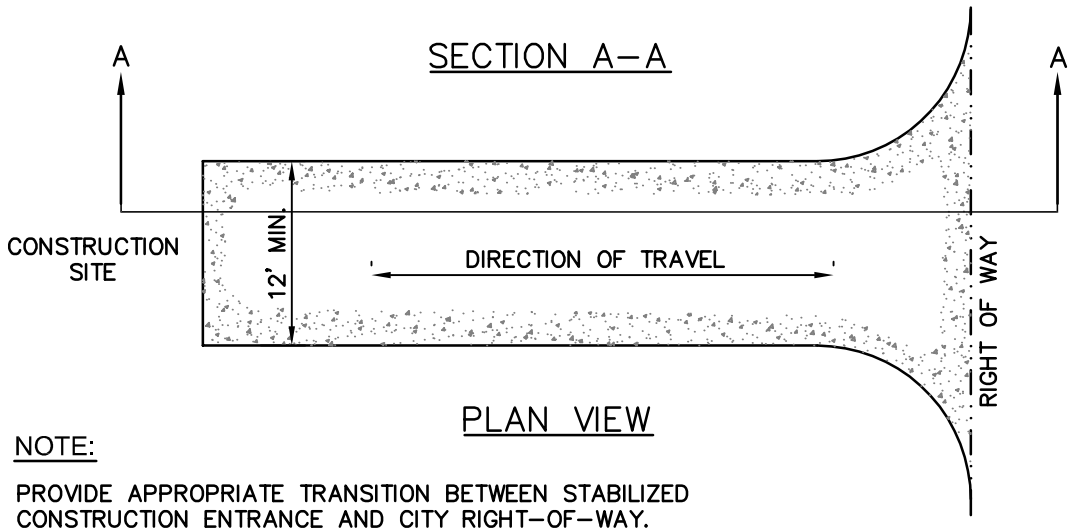

PLAN VIEW

NOTE:

PROVIDE APPROPRIATE TRANSITION BETWEEN STABILIZED CONSTRUCTION ENTRANCE AND CITY RIGHT–OF–WAY.

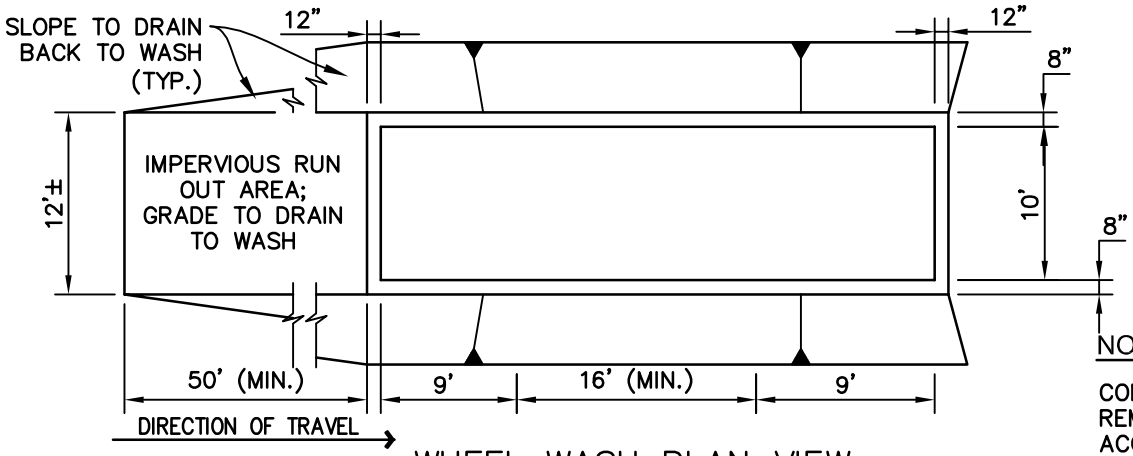

WHEEL WASH PLAN VIEW

NOTE:

CONTRACTOR TO REMOVE ACCUMULATED SEDIMENT FROM WHEEL WASH; MAY BE PIPED TO AN APPROVED SEDIMENT TRAP.

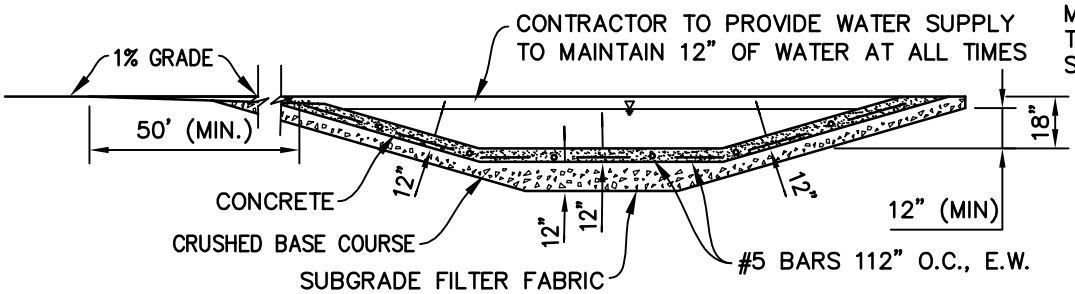

WHEEL WASH SECTION VIEW

	STABILIZED CONSTRUCTION SITE ACCESS				STD. NO. **801**
	SCALE: NONE	DRAWN: SJD	CHK: MGK	APPVD: Thomas M Mannell	DATE: OCT 2009

Images: Willits Logo.jpg; Xrefs:
Path: \\srosvr1.corp.w-and-k.com\PROJECTS\01064 - City of Willits\01064-09-001 Willits City Standards\CAD 01064-09-001\dwg\Willits800-810.dwg Layout Name: 801 Plot Date: Sep 29, 2009 at 10:36

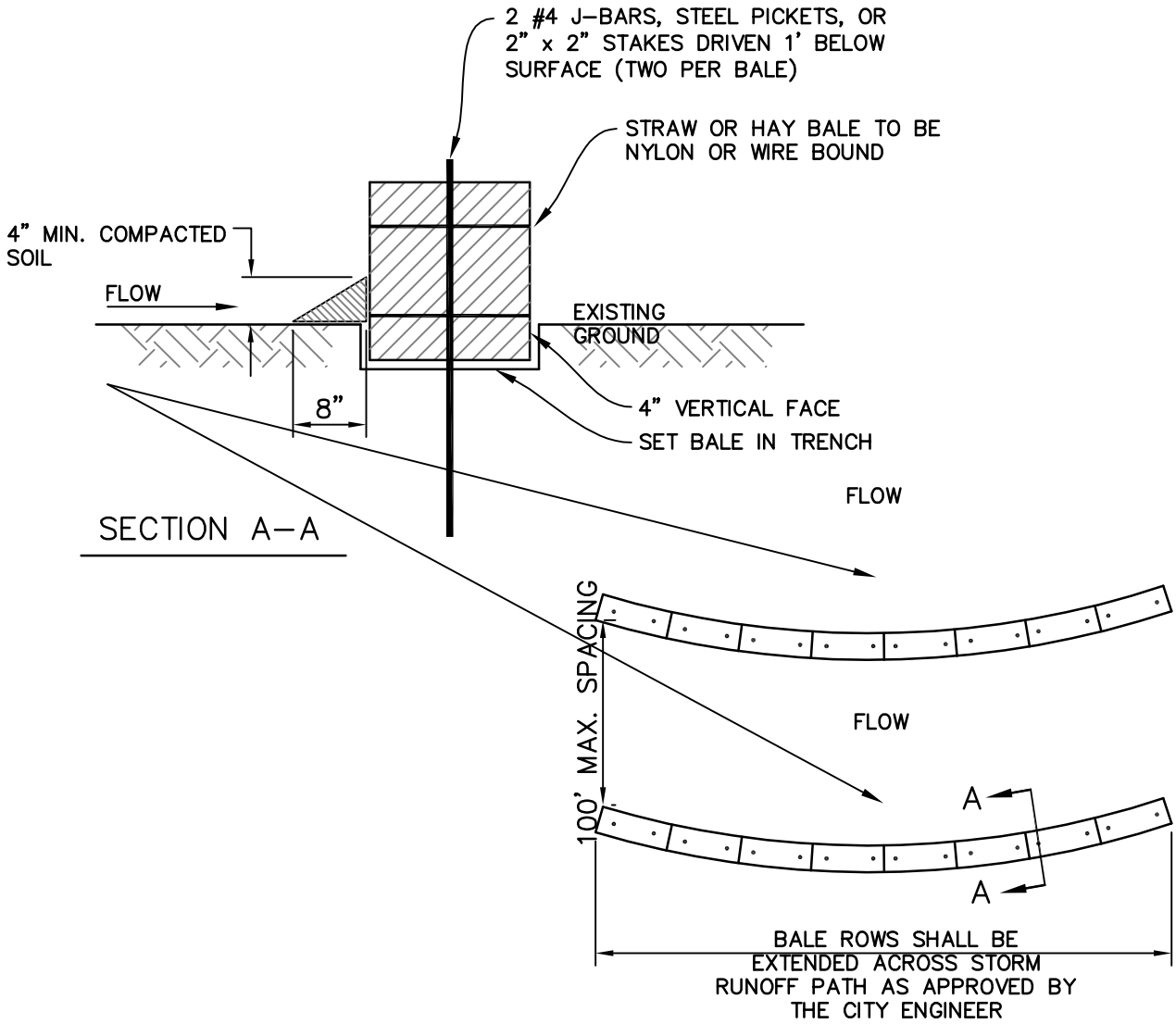

BALE DIKE ALIGNMENT

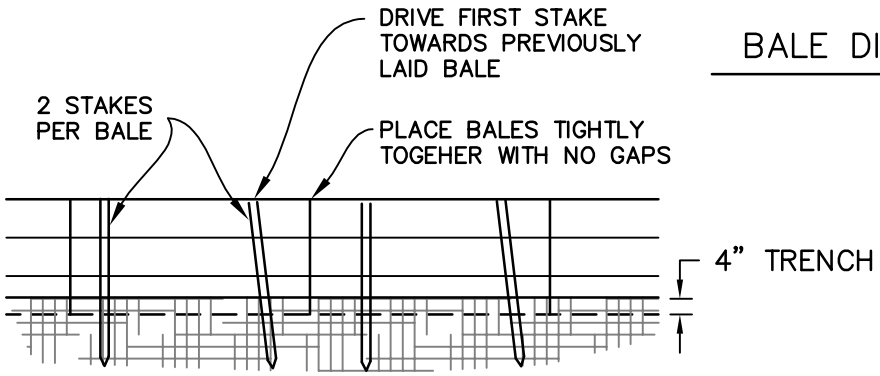

FRONT VIEW

STRAW BALE INSTALLATION

STD. NO.
802

SCALE: NONE	DRAWN: SJD	CHK: MGK	APPVD: Thomas M Mennett	DATE: OCT 2009

Images: Willits Logo.jpg; Xrefs:
Path: \\srosvr1.corp.w-and-k.com\PROJECTS\01064 - City of Willits\01064-09-001 Willits City Standards\CAD 01064-09-001\dwg\Willits800-810.dwg Layout Name: 802 Plot Date: Sep 29, 2009 at 10:36

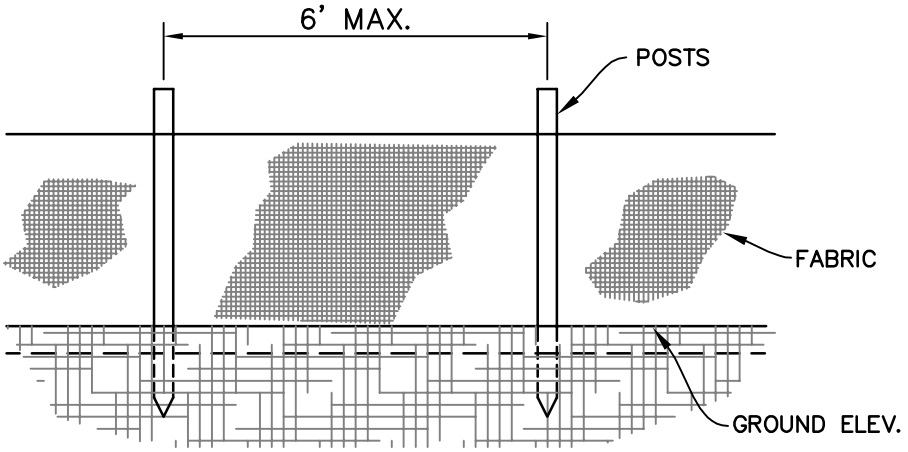

FRONT VIEW

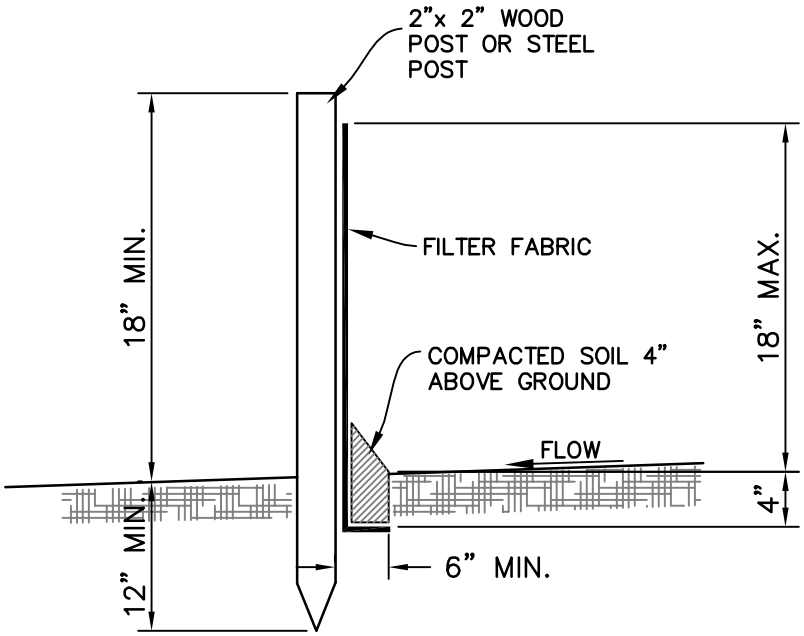

CROSS SECTION

FABRIC SILT BARRIER

STD. NO.
803

SCALE: NONE	DRAWN: SJD	CHK: MGK	APPVD: Thomas M Mannell	DATE: OCT 2009

Images: Willits Logo.jpg; Xrefs:
Path: \\srosvr1.corp.w-and-k.com\PROJECTS\01064 - City of Willits\01064-09-001 Willits City Standards\CAD 01064-09-001\dwg\Willits800-810.dwg Layout Name: 803 Plot Date: Sep 29, 2009 at 10:36

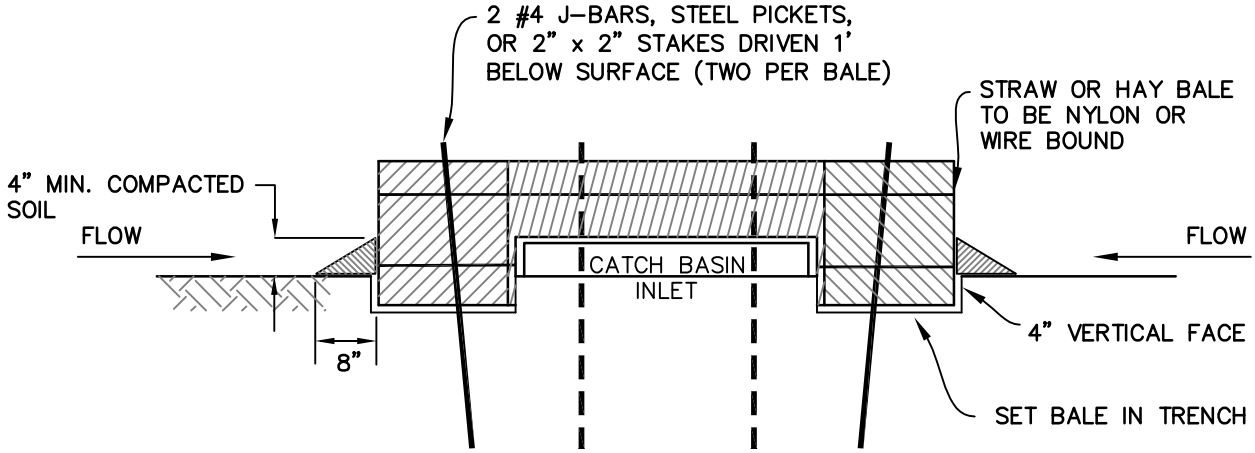

SECTION A–A

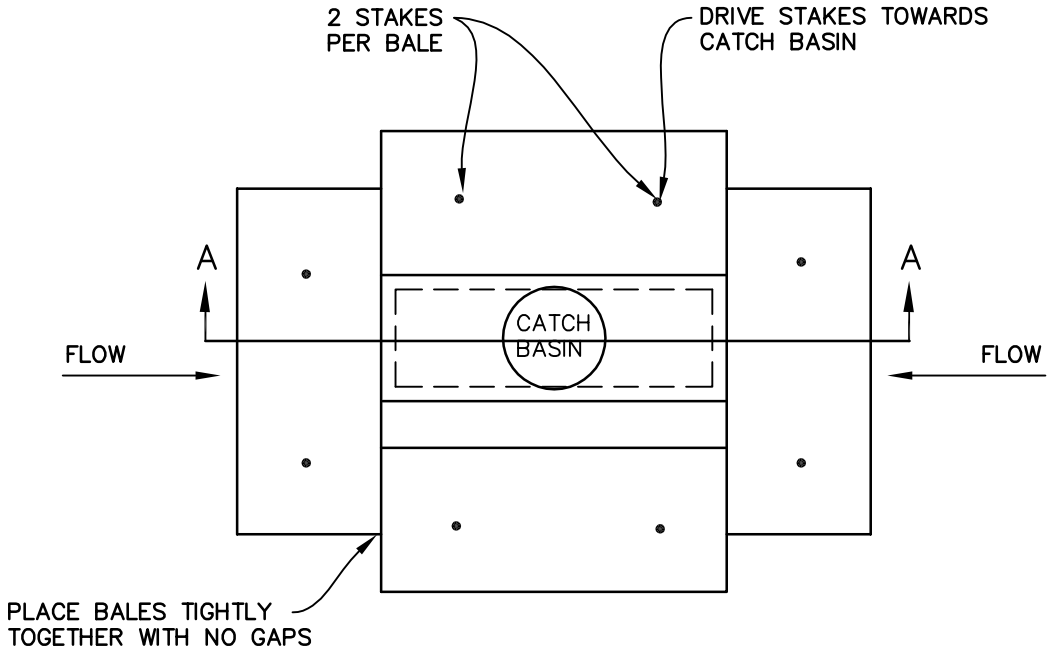

PLAN VIEW

STRAW BALE CATCH BASIN SEDIMENT BARRIER

STD. NO. 804

SCALE: NONE	DRAWN: SJD	CHK: MGK	APPVD: Thomas M Mannatt	DATE: OCT 2009

Images: Willits Logo.jpg; Xrefs:
Path: \\srosvr1.corp.w-and-k.com\PROJECTS\01064 - City of Willits\01064-09-001 Willits City Standards\CAD 01064-09-001\dwg\Willits800-810.dwg Layout Name: 804 Plot Date: Sep 29, 2009 at 10:36

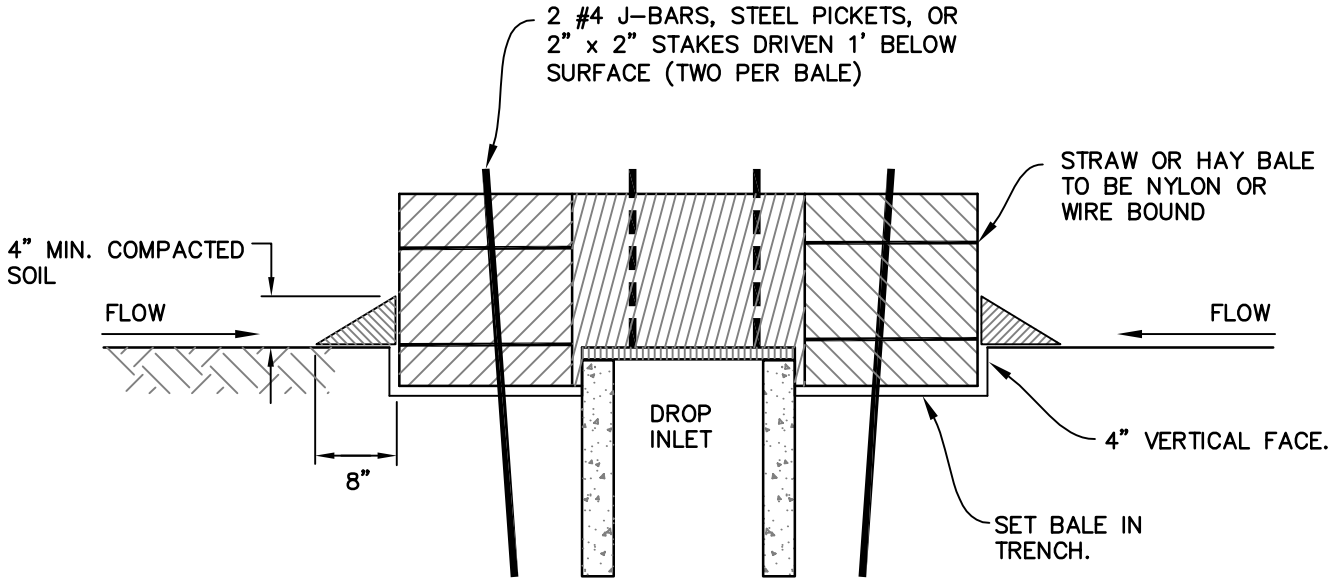

SECTION A–A

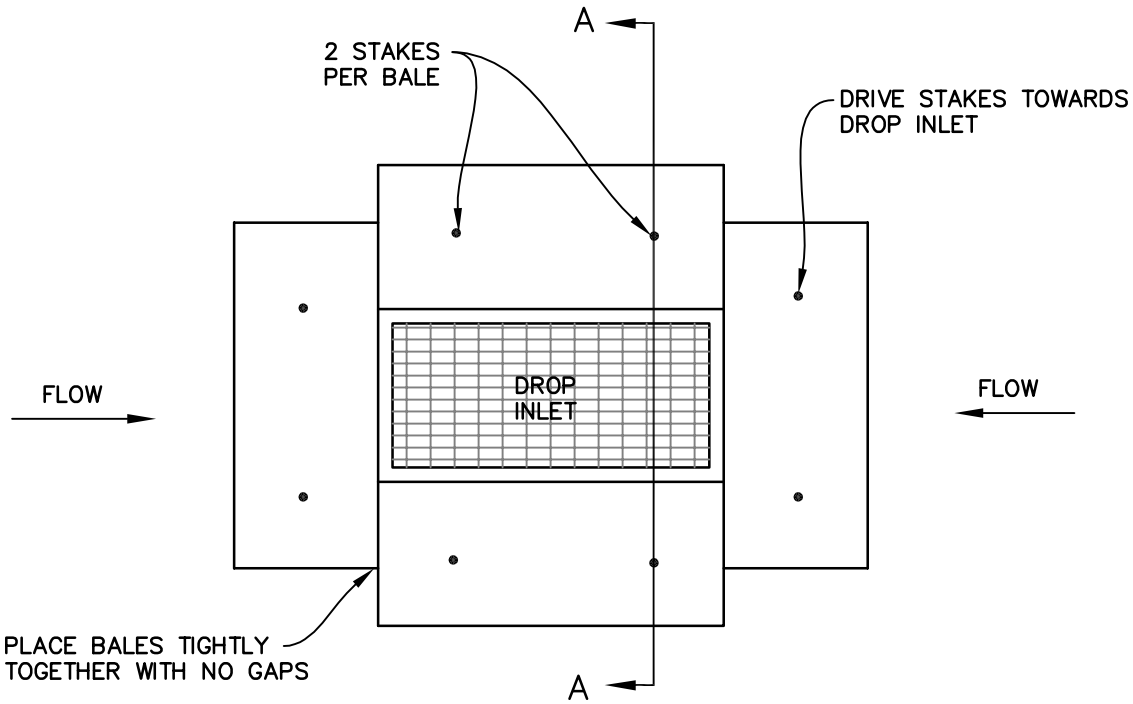

PLAN VIEW

CITY OF WILLITS	**STRAW BALE DROP INLET SEDIMENT BARRIER**				STD. NO. **805**
	SCALE: NONE	DRAWN: SJD	CHK: MGK	APPVD: Thomas M Mannelli	DATE: OCT 2009

Images: Willits Logo.jpg; Xrefs:
Path: \\srosvr1.corp.w-and-k.com\PROJECTS\01064 - City of Willits\01064-09-001 Willits City Standards\CAD 01064-09-001\dwg\Willits800-810.dwg Layout Name: 805 Plot Date: Sep 29, 2009 at 10:36

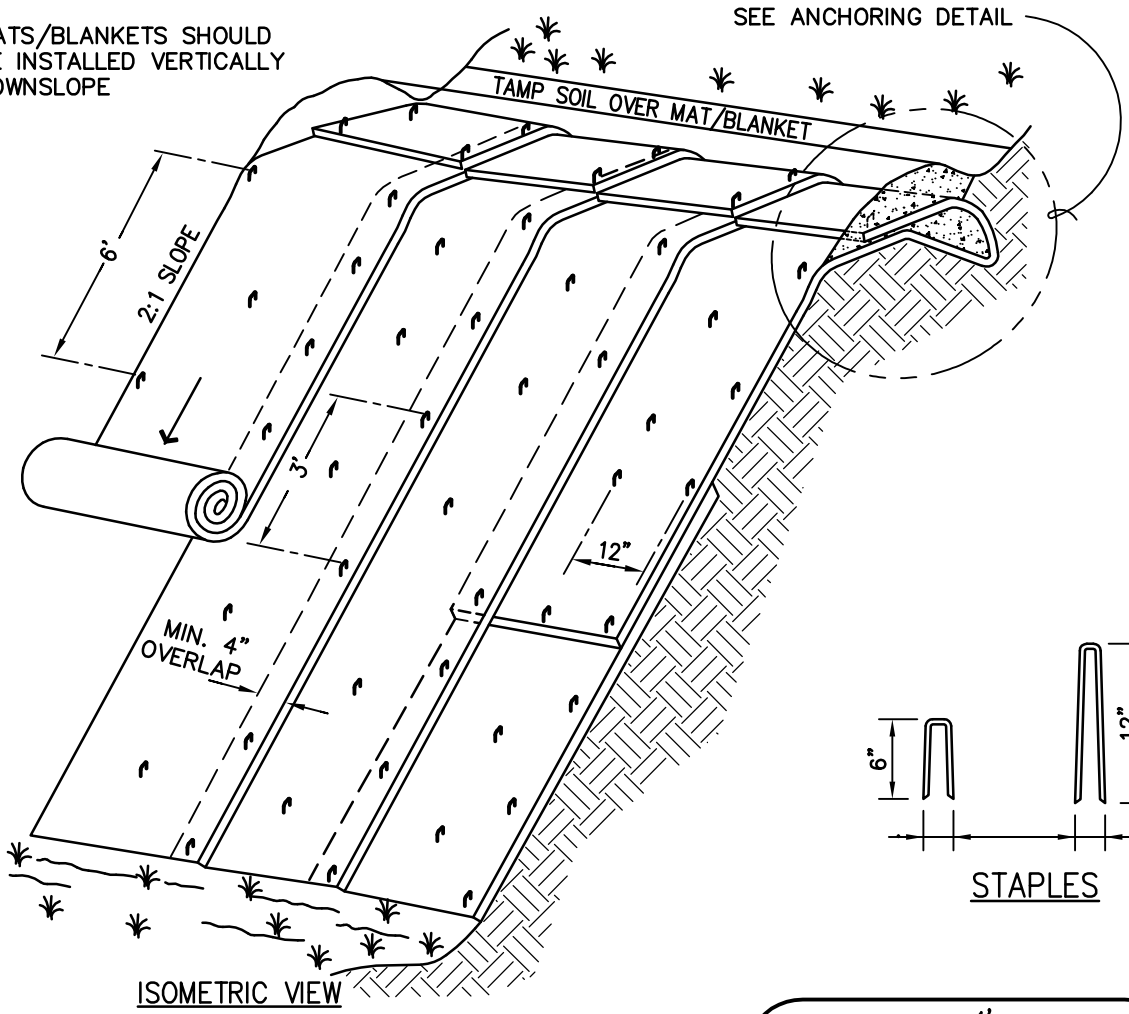

ISOMETRIC VIEW

TYPICAL SLOPE SOIL STABILIZATION

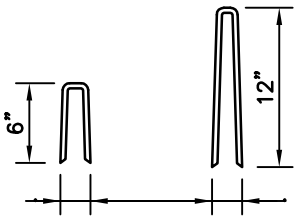

STAPLES

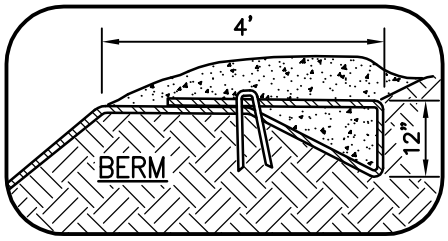

ANCHORING DETAIL

NOTES:

1. SLOPE SURFACE SHALL BE FREE OF ROCKS, CLODS, STICKS AND GRASS. MATS/BLANKETS SHALL HAVE GOOD SOIL CONTACT.
2. APPLY PERMANENT SEEDING BEFORE PLACING BLANKETS.
3. LAY BLANKETS LOOSELY AND STAKE OR STAPLE TO MAINTAIN DIRECT CONTACT WITH THE SOIL. DO NOT STRETCH.

CITY OF WILLITS	**EROSION BLANKETS & TURF REINFORCEMENT MATS SLOPE PROTECTION**				STD. NO. **806**
	SCALE: NONE	DRAWN: SJD	CHK: MGK	APPVD: Thomas M Mannelt	DATE: OCT 2009

Images: Willits Logo.jpg; Xrefs:
Path: \\srosvr1.corp.w-and-k.com\PROJECTS\01064 - City of Willits\01064-09-001 Willits City Standards\CAD 01064-09-001\dwg\Willits800-810.dwg Layout Name: 806 Plot Date: Sep 29, 2009 at 10:36

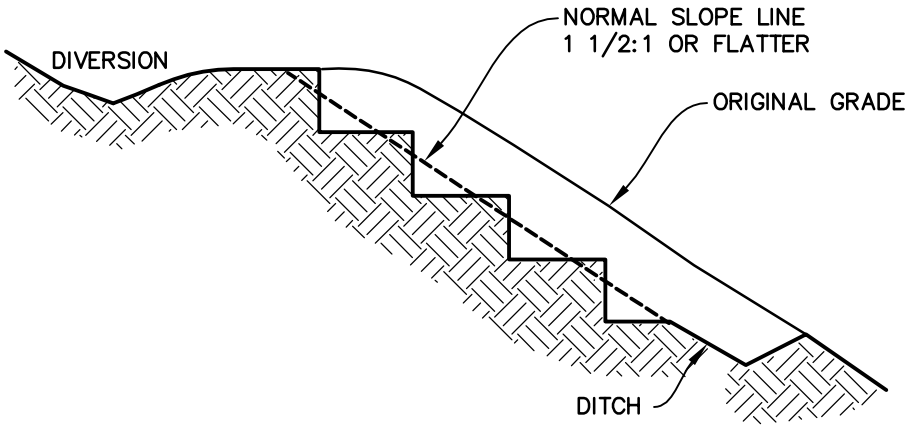

STEPPED SLOPE

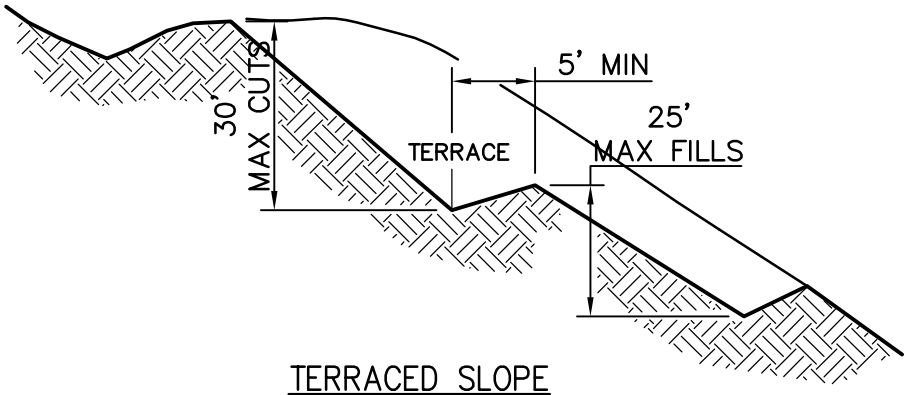

TERRACED SLOPE

NOTES:

1. VERTICAL CUT DISTANCE SHALL BE LESS THAN HORIZONTAL DISTANCE.
2. VERTICAL CUT SHALL NOT EXCEED 2 FT. IN SOFT MATERIAL AND 3 FT. IN ROCKY MATERIAL.

CITY OF WILLITS	STEPPED OR TERRACED SLOPE				STD. NO. 807
	SCALE: NONE	DRAWN: SJD	CHK: MGK	APPVD: Thomas M Mannelli	DATE: OCT 2009

Images: Willits Logo.jpg; Xrefs:
Path: \\srosvr1.corp.w-and-k.com\PROJECTS\01064 - City of Willits\01064-09-001 Willits City Standards\CAD 01064-09-001\dwg\Willits800-810.dwg Layout Name: 807 Plot Date: Sep 29, 2009 at 10:36

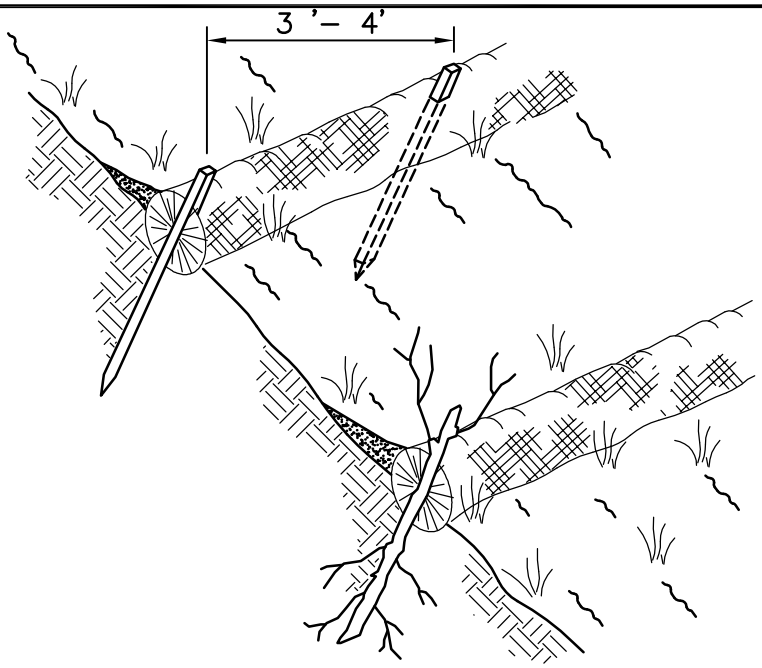

STRAW ROLLS MUST BE PLACED
ALONG SLOPE CONTOURS
ABUTTING STRAW ROLLS SHALL OVERLAP

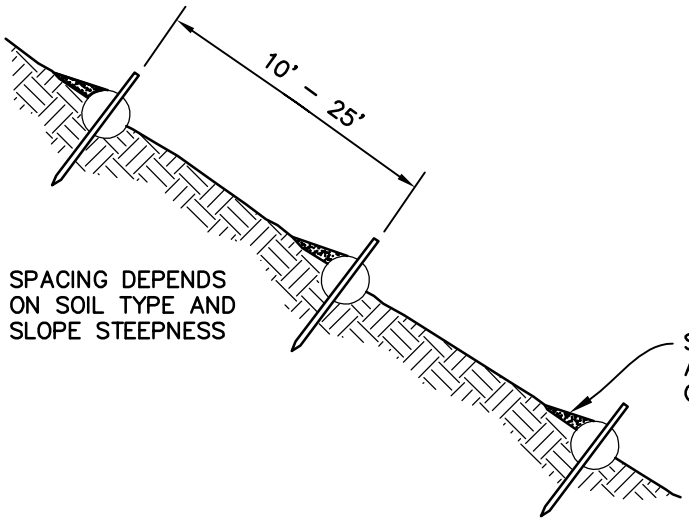

SPACING DEPENDS
ON SOIL TYPE AND
SLOPE STEEPNESS

SEDIMENT, ORGANIC MATTER,
AND NATIVE SEEDS ARE
CAPTURED BEHIND THE ROLLS

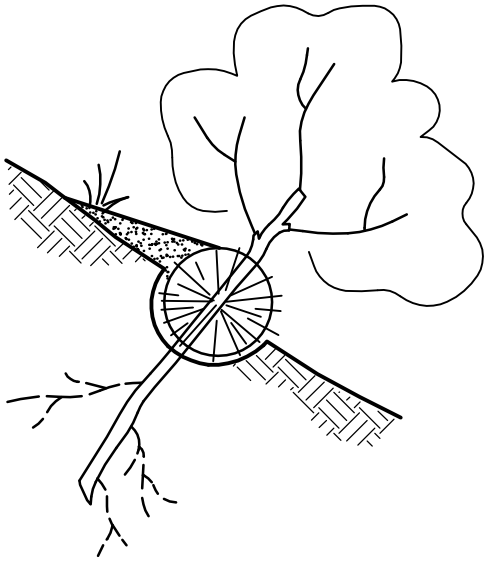

LIVE STAKE

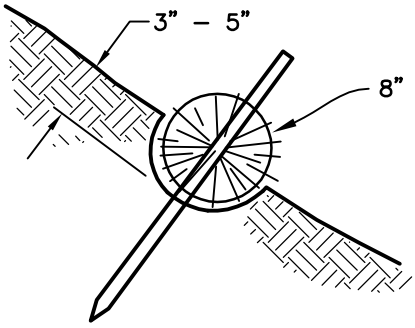

1"x1" STAKE

NOTES:

1. STRAW ROLL INSTALLATION REQUIRES THE PLACEMENT AND SECURE STAKING OF THE ROLL IN A TRENCH, 3"–5" DEEP, DUG ON CONTOUR. RUN–OFF MUST NOT BE ALLOWED TO RUN UNDER OR AROUND ROLL.

STRAW ROLLS

CITY OF WILLITS	FIBER ROLLS				STD. NO. 808
	SCALE: NONE	DRAWN: SJD	CHK: MGK	APPVD: Thomas M Mannelt	DATE: OCT 2009

Images: Willits Logo.jpg; Xrefs:
Path: \\srosvr1.corp.w-and-k.com\PROJECTS\01064 - City of Willits\01064-09-001 Willits City Standards\CAD 01064-09-001\dwg\Willits800-810.dwg Layout Name: 808 Plot Date: Sep 29, 2009 at 10:36

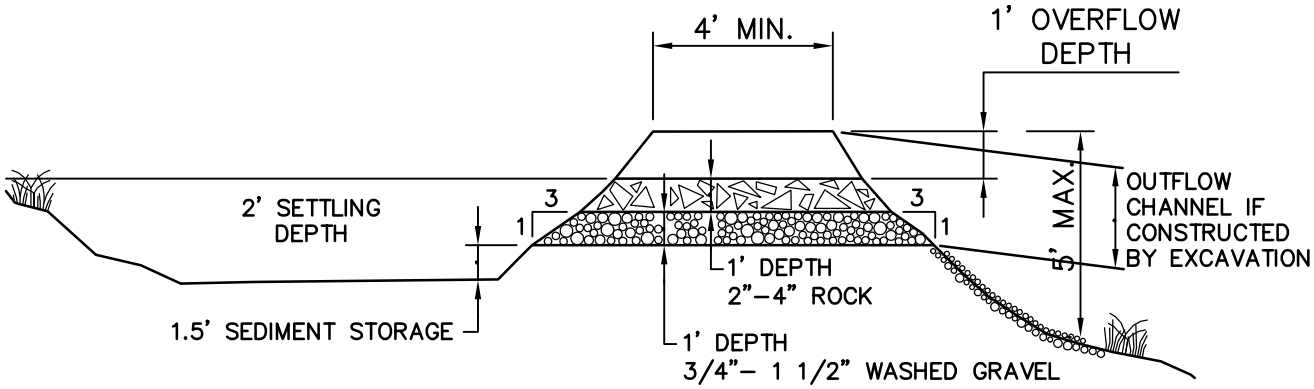

CROSS SECTION

NOTE:
MAY BE CONSTRUCTED BY EXCAVATION OR BY BUILDING A BERM.

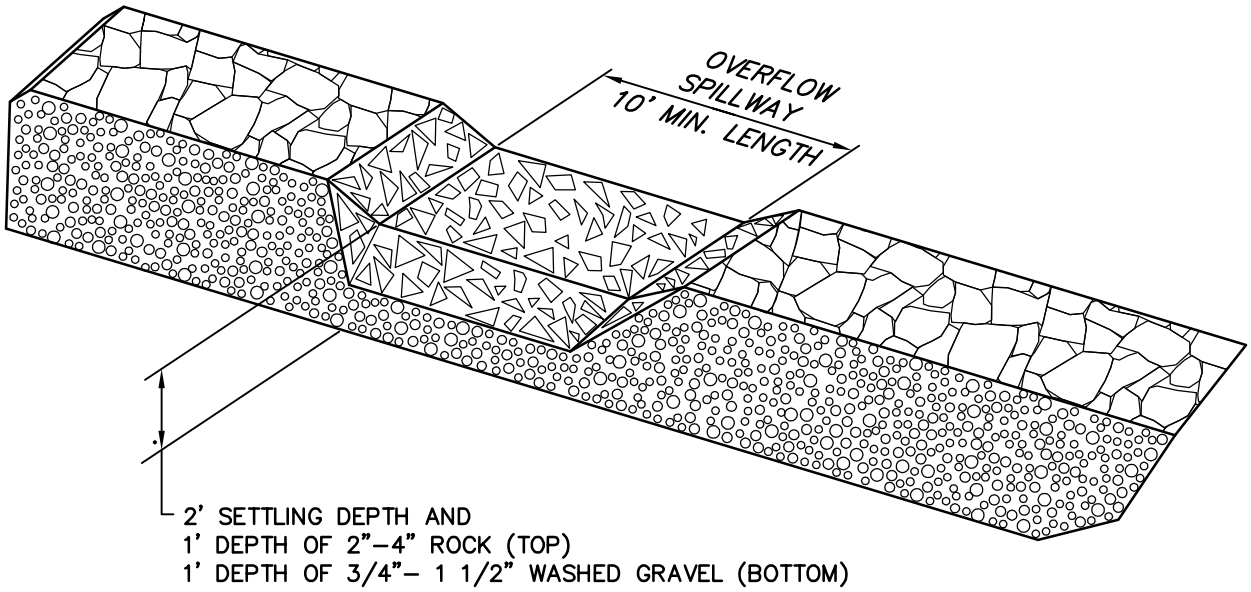

SEDIMENT TRAP OUTLET

NOTES:

1. A FILTER FABRIC FENCE OR SIMILAR FILTER MUST BE CONSTRUCTED TO FILTER RUNOFF FROM THE SEDIMENT TRAP PRIOR TO DISCHARGE FROM THE CONSTRUCTION SITE.
2. INSPECT TRAP REGULARLY AND AFTER EACH MAJOR RAINFALL. REMOVE SEDIMENT DEPOSITS WHEN THEY REACH APPORX. 6" DEPTH.

CITY OF WILLITS	**SEDIMENT BASIN**				STD. NO. **809**
	SCALE: NONE	DRAWN: SJD	CHK: MGK	APPVD: Thomas M Mannelt	DATE: OCT 2009

Images: Willits Logo.jpg; Xrefs:
Path: \\srosvr1.corp.w-and-k.com\PROJECTS\01064 - City of Willits\01064-09-001 Willits City Standards\CAD 01064-09-001\dwg\Willits800-810.dwg Layout Name: 809 Plot Date: Sep 29, 2009 at 10:36

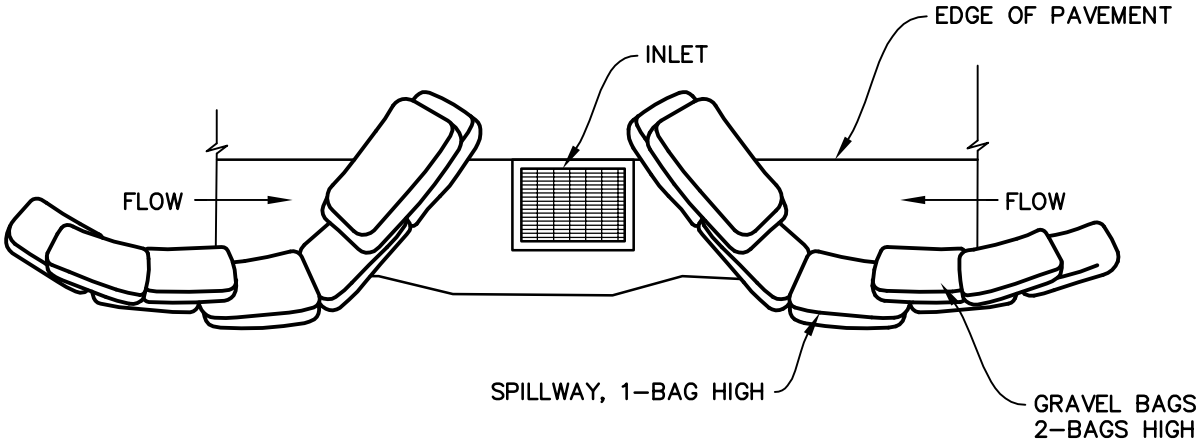

TYPICAL PROTECTION FOR INLET WITH OPPOSING FLOW DIRECTIONS

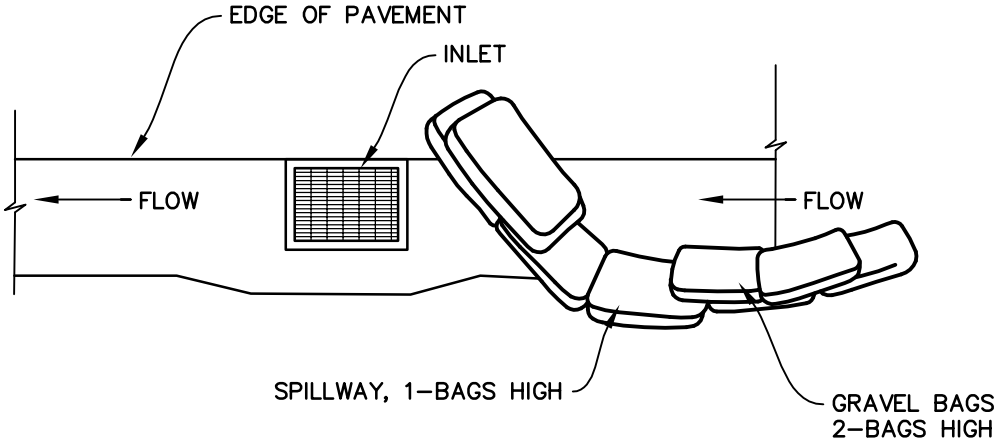

TYPICAL PROTECTION FOR INLET WITH SINGLE FLOW DIRECTIONS

NOTES:

1. INTENDED FOR SHORT–TERM USE.
2. USE TO INHIBIT NON–STORM WATER FLOW.
3. ALLOW FOR PROPER MAINTENANCE AND CLEANUP.
4. BAGS MUST BE REMOVED AFTER ADJACENT OPERATION IS COMPLETED.
5. NOT APPLICABLE IN AREAS WITH HIGH SILTS AND CLAYS WITHOUT FILTER FABRIC.

CITY OF WILLITS	STORM DRAIN DROP INLET/ CATCH BASIN WITH GRAVEL BAGS				STD. NO. 810
	SCALE: NONE	DRAWN: SJD	CHK: MGK	APPVD: Thomas M Mannelli	DATE: OCT 2009

Images: Willits Logo.jpg; Xrefs:
Path: \\srosvr1.corp.w-and-k.com\PROJECTS\01064 - City of Willits\01064-09-001 Willits City Standards\CAD 01064-09-001\dwg\Willits800-810.dwg Layout Name: 810 Plot Date: Sep 29, 2009 at 10:36